CLIMATE ACTION RESERVE

Version 2.0 | June 29, 2011

Organic Waste Digestion

Project Protocol

Climate Action Reserve
601 West 5th Street, Suite 650
Los Angeles, CA 90071
www.climateactionreserve.org

Released June 29, 2011

© 2011 Climate Action Reserve. All rights reserved. This material may not be reproduced, displayed, modified or distributed without the express written permission of the Climate Action Reserve.

Acknowledgements

Staff

Syd Partridge	Climate Action Reserve
Max DuBuisson	Climate Action Reserve
Derik Broekhoff	Climate Action Reserve
Tim Kidman	Climate Action Reserve
Nancy Kong	Climate Action Reserve
Heather Raven	Climate Action Reserve
Rachel Tornek	Climate Action Reserve

Workgroup

Marcia Gowen Trump	Atmosclear
Keith Driver	Blue Source Canada
Nick Lapis	Californians Against Waste
Pierre Loots	Cantor CO_2e
Kevin Eslinger	California Air Resources Board
Shelby Livingston	California Air Resources Board
Jack Macy	City and County of San Francisco
Rowena Romano	City of Los Angeles
Ronald Lew	California Integrated Waste Management Board
Rob Janzen	Climate Check
Paul Relis	CR&R Inc.
Stephanie Cheng	East Bay Municipal Utility District
Jay Wintergreen	First Environment
Adam Penque	Greenhouse Gas Services, LLC.
Juliette Bohn	Humboldt Waste Management Authority
Michael Hvisdos	Microgy, Inc.
Rachel Oster	Recology, Inc.
Derek Markolf	Ryerson, Master and Associates, Inc.
Peter Freed	Terra Pass
Charles Kennedy	Tetra Tech
Sally Brown	University of Washington
Chuck White	Waste Management
Paul Sousa	Western United Dairymen

Table of Contents

Abbreviations and Acronyms 1

1 Introduction 2
2 The GHG Reduction Project 3
2.1 Background 3
2.2 Project Definition 3
2.3 The Project Developer 4
3 Eligibility Rules 5
3.1 Location 5
3.2 Project Start Date 5
3.3 Project Crediting Period 6
3.4 Anaerobic Baseline Conditions 6
3.5 Additionality 6
3.5.1 The Performance Standard Test 7
3.5.2 The Legal Requirement Test 8
3.6 Regulatory Compliance 10
4 The GHG Assessment Boundary 12
5 Quantifying GHG Emission Reductions 19
5.1 Quantifying Baseline Emissions 21
5.1.1 Baseline Emissions from Eligible Food and Food-Soiled Paper Waste Streams (SSR 4) 23
5.1.2 Baseline Emissions from Eligible Agro-Industrial Wastewater Streams (SSR 6) 31
5.1.3 Baseline Emissions from Manure Treatment Systems (SSR 5) 33
5.2 Quantifying Project Emissions 33
5.2.1 Project CO_2 Emissions from On-Site Fossil Fuel Combustion and Grid Delivered Electricity (SSRs 3,8,13,15,17) 34
5.2.2 Project Emissions from the Biogas Control System (SSRs 9,10,11,12,14) 35
5.2.3 Project Methane Emissions from Liquid Digester Effluent Storage and Treatment (SSR 16) 38
5.2.4 Project Emissions from Aerobic Treatment of Digestate (SSR 17) 39
5.2.5 Project Emissions from Anaerobic Disposal of Digestate Produced in the Digestion Process (SSR 18) 41
5.2.6 Project Emissions from Manure Treatment Systems (SSR 5) 41
5.3 Calculating the Total Quantity of Methane Destroyed by the Project 42
6 Project Monitoring 44
6.1 Organic Waste and Wastewater Monitoring Requirements 44
6.1.1 Food and Food-Soiled Paper Waste Monitoring 44
6.1.2 Monitoring and Documenting Pre-Project Waste Disposal for Grocery Store Waste Streams 45
6.1.3 Agro-Industrial Wastewater Monitoring 46
6.1.4 Digester Effluent and Digestate Monitoring 47
6.2 Biogas Control System Monitoring 48
6.2.1 Biogas Measurement Instrument QA/QC 49
6.2.2 Missing Data 50
6.3 Monitoring Parameters 50
7 Reporting Parameters 64
7.1 Project Submittal Documentation 64
7.2 Record Keeping 64

7.3 Reporting Period and Verification Cycle 65
8 Verification Guidance 66
8.1 Standard of Verification 66
8.2 Monitoring Plan 66
8.3 Verifying Project Eligibility.....66
8.4 Core Verification Activities 68
8.5 OWD Verification Items 68
8.5.1 Project Eligibility and CRT Issuance 69
8.5.2 Quantification 70
8.5.3 Risk Assessment.....71
8.6 Completing Verification.....71
9 Glossary of Terms.....72
10 References.....76

Appendix A Associated Environmental Impacts 78
Appendix B Data Lookup Tables.....79
Appendix C Development of the Performance Standard 84
Appendix D Data Substitution.....93

List of Tables

Table 4.1. Description of all Sources, Sinks, and Reservoirs.....14
Table 5.1. Waste Generator Categories and Default Food and Soiled Paper Fractions by Weight 30
Table 5.2. Combined Methane and Nitrous Oxide Emission Factors for Aerobic Treatment of Digestate.....40
Table 6.1. Organic Waste Digestion Project Monitoring Parameters 51
Table 8.1. Summary of Eligibility Criteria for an Organic Waste Digestion Project.....67
Table 8.2. Eligibility Verification Items 69
Table 8.3. Quantification Verification Items 70
Table 8.4. Risk Assessment Verification Items.....71
Table B.1. Decay Rates (k) by Waste Type and Climate……...79
Table B.2. Fraction of Waste Sent to Waste to Energy (WTE) Facilities and Gas-Collection Fraction, by State.....79
Table B.3. Emissions from the Decay of Digestate at a Landfill ($MTCO_2e$/MT Waste) – Calculated Using the FOD Model.....80
Table B.4. Methane Correction Factor (MCF) for Wastewater Treatment Systems 80
Table B.5. Biogas Collection Efficiency (BCE) by Digester Type.....81
Table B.6. Biogas Destruction Efficiency Default Values by Destruction Device.....81
Table B.7. CO_2 Emission Factors for Fossil Fuel Use 82
Table C.1. Selected Organic Waste Source Industries Studied……85
Table C.2. Economic Evaluation Guidelines for Digestion Feedstock.....91
Table C.3. Example Digester Plant, Payback Economics.....92

List of Figures

Figure 4.1. General illustration of the GHG Assessment Boundary 13
Figure 5.1. Organizational Chart of Equations in Section 5 20
Figure 6.1. Suggested Arrangement of Biogas Metering Equipment 48
Figure B.1. K-Value Categories in the U.S., by County……83

List of Equations

Equation 5.1. Calculating GHG Emission Reductions 21
Equation 5.2. Total Calculated Baseline Methane Emissions 22
Equation 5.3. Calculating Baseline Methane Emissions for Solid Waste Streams (SSR 4) 23
Equation 5.4. Baseline Methane Emissions from Eligible Food Waste, by Waste Stream 24
Equation 5.5. Baseline Methane Emissions from Eligible Soiled Paper Waste, by Waste Stream 26
Equation 5.6. Determining Weight of Eligible Food and Soiled Paper Waste 28
Equation 5.7. Determining the Quarterly Fractional Weight of Food and Soiled Paper Waste ...31
Equation 5.8. Total Baseline Emissions for Eligible Agro-Industrial Wastewater Streams (SSR 6) 32
Equation 5.9. Baseline Emissions for Each Eligible Wastewater Stream.....32
Equation 5.10. Baseline Emissions for Eligible Manure Streams (SSR 5) 33
Equation 5.11. Total Project Emissions from All Sources 34
Equation 5.12. Project Carbon Dioxide Emissions from Fossil Fuel and Grid Electricity.....35
Equation 5.13. Project Methane Emissions from the BCS (SSRs 9, 10, 11, 12, 14) 36
Equation 5.14. Adjusting the Biogas Flow for Temperature and Pressure 37
Equation 5.15. Methane Release from Venting Events 38
Equation 5.16. Project Methane Emissions from the BCS Effluent Pond (SSR 16) 39
Equation 5.17. Methane and Nitrous Oxide Emissions from Aerobic Treatment of Digestate (SSR 17) 40
Equation 5.18. Methane Emissions from Anaerobic Treatment of Digestate (SSR 18).....41
Equation 5.19. Project Emissions from Non-BCS Related Manure Treatment/Storage Systems 42
Equation 5.20. Metered Methane Destruction 43

Abbreviations and Acronyms

ACF	Actual cubic feet
BCS	Biogas control system
CDM	Clean Development Mechanism
CH_4	Methane
CO_2	Carbon dioxide
CRT	Climate Reserve Tonne
COD	Chemical oxygen demand
FOD	First Order Decay
GHG	Greenhouse gas
MSW	Municipal solid waste
MT	Metric ton (or tonne)
N_2O	Nitrous oxide
OWC	Organic Waste Composting
OWD	Organic Waste Digestion
POTW	Publicly owned treatment works
Reserve	Climate Action Reserve
SCF	Standard cubic feet
SSRs	Sources, sinks, and reservoirs
UNFCCC	United Nations Framework Convention on Climate Change
WW	Wastewater

1 Introduction

The Climate Action Reserve (Reserve) Organic Waste Digestion (OWD) Project Protocol provides guidance to account for, report, and verify greenhouse gas (GHG) emission reductions associated with the diversion of organic waste and/or wastewater away from anaerobic treatment and disposal systems and to a biogas control system (BCS). For the purposes of this protocol, a biogas control system consists of an anaerobic digester, a biogas collection and monitoring system, and one or more biogas destruction devices.[1] Eligible organic waste and/or wastewater streams can be separately-digested, co-digested together, or co-digested in combination with livestock manure.[2] Project developers that co-digest eligible organic waste and/or wastewater sources together with livestock manure must use this protocol together with the most current version (as of the date of project listing) of the Climate Action Reserve's Livestock Project Protocol.

As the premier carbon offset registry for the North American carbon market, the Climate Action Reserve works to ensure environmental benefit, integrity and transparency in market-based solutions that reduce greenhouse gas (GHG) emissions. It establishes high quality standards for carbon offset projects, oversees independent third-party verification bodies, issues carbon credits generated from such projects and tracks the transaction of credits over time in a transparent, publicly-accessible system. By facilitating and encouraging the creation of GHG emission reduction projects, the Climate Action Reserve program promotes immediate environmental and health benefits to local communities, allows project developers access to additional revenues and brings credibility and value to the carbon market. The Climate Action Reserve is a private 501c(3) nonprofit organization based in Los Angeles, California.

Project developers that initiate OWD projects use this document to quantify and register GHG reductions with the Reserve. The protocol provides eligibility rules, methods to calculate reductions, performance-monitoring instructions, and procedures for reporting project information to the Reserve. Additionally, all project reports receive at least annual, independent verification by ISO-accredited and Reserve-approved verification bodies. Guidance for verification bodies to verify reductions is provided in the Reserve Verification Program Manual and Section 8 of this protocol.

This protocol is designed to ensure the complete, consistent, transparent, accurate, and conservative quantification and verification of GHG emission reductions associated with an OWD project.[3]

[1] Eligible destruction options include both on-site destruction or off-site destruction
[2] Eligible organic waste streams are those that meet the "performance standard" threshold specified in Section 3.5.1 of this protocol
[3] See the WRI/WBCSD GHG Protocol for Project Accounting (Part I, Chapter 4) for a description of GHG reduction project accounting principles.

2 The GHG Reduction Project

2.1 Background

Methane (CH_4), a potent greenhouse gas (GHG), can be formed as a by-product of microbial respiration reactions that occur when organic materials decompose in the absence of oxygen (i.e. under anaerobic conditions). This methane, if not captured, is emitted to the atmosphere. For manure and organic wastewater streams, this predominantly occurs when the waste is managed in uncontrolled anaerobic liquid-based systems (e.g. in lagoons, ponds, tanks, or pits). For solid organic waste, this predominantly occurs if the waste is disposed of at a landfill. The resulting CH_4 component of the landfill gas, if not oxidized by landfill cover material or captured and destroyed by a gas collection system, will eventually be released to the atmosphere.

A biogas control system is designed to capture and destroy methane gas produced from the anaerobic decomposition of organic wastes and manure. By diverting organic waste and manure away from landfills and anaerobic liquid-based management systems to a biogas control system, emissions of methane to the atmosphere can be prevented and avoided.

The rate at which CH_4 production occurs in a landfill is governed by the decay rates of the specific types of waste that are deposited in the landfill. Although many landfills actively control LFG through gas collection and combustion systems, recent research indicates that typical landfill gas collection system efficiencies increase with time after initial waste burial as the collection system is installed and subsequently expanded. [4] Therefore, the fraction of CH_4 that is collected from the decay of a certain type of waste will be inversely proportional to the decay rate of the waste type. For rapidly decaying organic waste streams such as food waste, a greater fraction of the CH_4 produced from decay will go un-captured as compared to slowly degrading waste types.

2.2 Project Definition

For the purpose of this protocol, a GHG reduction project ("project") is defined as the digestion of one or more eligible organic waste and/or agro-industrial wastewater streams in an operational biogas control system that captures and destroys methane gas that would otherwise have been emitted to the atmosphere in the absence of the project. For the purposes of this protocol, a BCS is considered *operational* on the date at which the BCS begins destroying methane gas upon completion of a start-up period.

Captured biogas can be destroyed on-site, or transported for off-site use (e.g. through a gas distribution or transmission pipeline), or used to power vehicles or fuel cells. Regardless of how project developers take advantage of the captured biogas, the ultimate fate of the methane must be destruction.

Projects that co-digest eligible organic waste streams together with manure also meet the definition of an OWD project. However, projects that digest manure without the addition of one or more eligible organic waste streams do not meet the definition of an OWD project and must use the Reserve's Livestock Project Protocol to register GHG reductions with the Reserve.

[4] De la Cruz, F.B. and Barlaz, M. *Estimation of Waste Component Specific Landfill Decay Rates Using Laboratory-Scale Decomposition Data*. (2010).

Centralized digesters that digest eligible waste streams from more than one source also meet the definition of an OWD project. Similarly, existing digesters at municipal wastewater treatment plants that use excess capacity to co-digest or single-digest eligible organic waste streams also meet the definition of an OWD project. An *eligible* waste stream is one that:

1. Consists of MSW food waste, non-recyclable MSW food-soiled paper waste, or agro-industrial wastewater streams as defined in Section 3.5.1; and

2. Continually passes the Legal Requirement Test criteria as outlined in Section 3.5.2.[5]

2.3 The Project Developer

The "project developer" is an entity that has an active account on the Reserve, submits a project for listing and registration with the Reserve, and is ultimately responsible for all project reporting and verification. Project developers may be agribusiness owners and operators, such as dairy or swine farmers, cheese producers, or food or agricultural processing plant operators. They may also be other entities, such as renewable power developers, municipalities, or waste management entities.

In all cases, the project developer must attest to the Reserve that they have exclusive claim to the GHG reductions – including indirect emission reductions – resulting from the project. Indirect emission reductions are reductions in GHG emissions that occur at a location other than where the reduction activity is implemented, and/or at sources not owned or controlled by project participants. An OWD project may result in indirect emission reductions if it diverts organic waste streams away from landfills or wastewater treatment systems that are not located at the project site or that are not owned or controlled by project participants. Each time a project is verified, the project developer must attest that no other entities are reporting or claiming (e.g. for voluntary reporting or regulatory compliance purposes) the GHG reductions caused by the project.[6] The Reserve will not issue CRTs for GHG reductions that are reported or claimed by entities other than the project developer (e.g. waste generators, landfills, municipalities or others not designated as the project developer).

[5] Each food waste stream must have documented the county or jurisdiction of origination in order to ensure the stream is eligible per the Legal Requirement Test.
[6] This is done by signing the Reserve's Attestation of Title form, available at: http://www.climateactionreserve.org/how/projects/register/project-submittal-forms/

3 Eligibility Rules

Projects must fully satisfy the following eligibility rules in order to register with the Reserve. The criteria only apply to projects that meet the definition of a GHG reduction project (Section 2.2).

Eligibility Rule I:	Location	→	*U.S. and U.S. tribal areas*
Eligibility Rule II:	Project Start Date	→	*No more than six months prior to project submission*
Eligibility Rule III:	Anaerobic Baseline	→	*Demonstrate anaerobic baseline conditions*
Eligibility Rule IV:	Additionality	→	*Meet performance standard*
		→	*Exceed regulatory requirements*
Eligibility Rule V:	Regulatory Compliance	→	*Compliance with all applicable laws*

3.1 Location

Only projects located in the United States and on U.S. tribal lands are eligible to register reductions with the Reserve under this protocol. All organic waste, wastewater, and manure waste sources that contribute waste to the OWD project must be located within the United States. Under this protocol, reductions from international projects are not eligible to register with the Reserve.

3.2 Project Start Date

The project start date is defined as the date at which eligible feedstock is first digested in an *operational* biogas control system.[7] For the purposes of this protocol, a BCS is considered *operational* on the date at which the BCS begins destroying methane gas upon completion of a start-up period. This date can be selected by the project developer within a 6 month timeframe from the date at which an eligible feedstock is first loaded into the BCS digester. For digesters that were previously digesting eligible manure waste prior to other eligible organic waste feedstocks, the start date shall be defined as the date at which the eligible manure waste was first digested in the operational BCS. Projects that digest manure without the addition of one or more eligible organic waste streams must use the Reserve's Livestock Project Protocol if seeking to register GHG reductions with the Reserve.

[7] In some instances, food waste digestion projects may go through an initial piloting, demonstration, or testing phase where the intent is to perform research or testing on digester components and potential feedstocks. The piloting phase is generally prior to the financial commitment to implement a larger-scale (commercial scale) digestion project. If a project has gone through a piloting phase and can demonstrate that less than 5,000 MT of food waste was digested per year during the piloting phase, the project developer may elect to begin the 10-year crediting period on the date corresponding to the operational start date of the commercial scale BCS system as opposed to the operational start date of the pilot-scale project.

To be eligible, the project must be submitted to the Reserve no more than six months after the project start date.[8] Projects may always be submitted for listing by the Reserve prior to their start date.

3.3 Project Crediting Period

The crediting period for OWD projects under this protocol is ten years. At the end of a project's first crediting period, project developers may apply for eligibility under a second crediting period. However, the Reserve will cease to issue CRTs for GHG reductions associated with eligible waste streams if at any point in the future, the diversion of those waste streams becomes legally required, as defined by the terms of the Legal Requirement Test (see Section 3.5.2), unless the waste stream passes the Legal Requirement Test for Local Waste Diversion Mandates, as specified in Section 3.5.2.1 below. Thus, the Reserve will issue CRTs for GHG reductions quantified and verified according to this protocol for a maximum of two ten year crediting periods after the project start date, or until the project activity is required by law (based on the date that a legal mandate takes effect), whichever comes first. Section 3.5.1 describes requirements for qualifying for a second crediting period.

3.4 Anaerobic Baseline Conditions

Developers of projects that digest agro-industrial wastewater streams and/or manure streams must demonstrate that the depth of the anaerobic wastewater and/or manure treatment ponds and lagoons prior to the project's implementation were sufficient to prevent algal oxygen production and create an oxygen-free bottom layer; which means at least 1 meter depth.[9] In the event that the pre-project wastewater treatment system is located at a facility other than where the project is located, and is owned and/or operated by an entity other than the project developer, the project developer shall ensure that the verifier has access to all necessary data and has access to the site where the pre-project wastewater treatment system is located.

Greenfield agro-industrial wastewater OWD projects (i.e. projects that are implemented at new industrial facilities that have no prior wastewater treatment system) are eligible only if the project developer can demonstrate that uncontrolled anaerobic storage and/or treatment of wastewater is common practice in the industry and geographic region where the project is located.

3.5 Additionality

The Reserve strives to register only projects that yield surplus GHG reductions that are additional to what would have occurred in the absence of a carbon offset market.

Projects must satisfy the following tests to be considered additional:

1. The Performance Standard Test
2. The Legal Requirement Test

[8] Projects are considered submitted when the project developer has fully completed, uploaded, and submitted the appropriate Project Submittal Form, available on the Reserve's website, through their account in the Climate Action Reserve.

[9] This is consistent with the United Nations Framework Convention on Climate Change (UNFCCC) Clean Development Mechanism (CDM) methodologies ACM0010 and ACM0014 (available at http://cdm.unfccc.int/methodologies/PAmethodologies/approved.html). For additional information on the design and maintenance of anaerobic wastewater treatment systems, see U.S. Department of Agriculture Natural Resources Conservation Service, Conservation Practice Standard, Waste Storage Facility, No. 313; and U.S. Department of Agriculture Natural Resources Conservation Service, Conservation Practice Standard, Waste Treatment Lagoon, No. 359.

3.5.1 The Performance Standard Test

Projects pass the Performance Standard Test by meeting a performance threshold, i.e. a standard of performance applicable to all organic waste digestion projects, established by this protocol.

OWD projects may digest numerous potential feedstocks. The performance standard for this protocol defines those feedstocks that the Reserve has determined are highly likely to result in methane emissions under common practice or "business as usual" management practices.[10] Only OWD projects that digest one of these feedstocks in a biogas control system are deemed to exceed common practice and are therefore eligible for registration under this protocol. An OWD project passes the Performance Standard Test only if one or more of the following eligible organic waste streams are consistently, periodically, or seasonally digested in the project's biogas control system:

- *Municipal Solid Waste (MSW) Food Waste*: Non-industrial food waste commonly disposed of in a MSW system, consisting of uneaten food, food scraps, spoiled food and food preparation wastes from homes, restaurants, kitchens, grocery stores, campuses, cafeterias, or similar institutions.

- *Food-Soiled Paper Waste*: Non-recyclable paper items that are co-mingled with eligible food waste, consisting of paper napkins and tissues, paper plates, paper cups, fast food wrappers, used pizza boxes, wax-coated cardboard, and other similar paper or compostable packaging[11] items typically disposed of in a MSW system.

- *Agro-industrial Wastewater*: Organic loaded wastewater from industrial or agricultural processing operations that, prior to the project, was treated in an uncontrolled anaerobic lagoon, pond, or tank at a privately owned treatment facility. Excluded from eligibility based on the Reserve's performance standard analysis are wastewaters produced at breweries, ethanol plants, pharmaceutical production facilities, and pulp and paper plants.

The Reserve's performance standard research indicates that approximately 2.5% of the MSW food waste generated in the U.S. is diverted from landfills annually as common practice, and that this is limited mostly to MSW food waste from grocery stores and supermarket diversion programs.[12] Therefore, MSW food waste and food-soiled paper waste streams are not eligible if they are sourced from grocery stores and/or supermarkets that have historically diverted these waste streams from landfills.

Projects must demonstrate the eligibility of each new grocery store waste stream digested by the project by documenting that the food and food-soiled paper component of the grocery store waste was being disposed of in a landfill for a period of at least 36 months prior to the date that the grocery store waste was first delivered to the project digester, or documenting that the grocery store waste stream was previously deemed to be an eligible waste stream at another OWD or OWC project that is registered with the Reserve. Waste streams originating from new

[10] A summary of the study used to establish this list of feedstocks and define this protocol's performance standard is provided in Appendix C.
[11] Non-paper compostable packaging products such as polyactide polymer (PLA) may replace paper or plastic packaging on some food products, and are assumed to have similar properties to soiled paper.
[12] Based on composting data supplied by the stakeholder work group that advised development of the Reserve's Organic Waste Composting protocol, and evidence from compost experts.

grocery store facilities are deemed eligible. Section 6.1.2 provides requirements for documenting the pre-project disposal of grocery store waste. All other MSW food and food-soiled paper waste sources described above are eligible. Food and food-soiled paper waste streams from grocery stores that are managed as a component of a mixed MSW waste stream (i.e. the food and food-soiled paper wastes are mixed with other types of waste in the same disposal container), and are not source separated, are not subject to the documentation requirements of this paragraph nor the eligibility restrictions of the previous paragraph.

Projects that co-digest organic waste together with manure must meet the OWD performance threshold as defined above to be eligible as an OWD project. Additionally, all livestock operations contributing manure to an OWD project must meet the eligibility requirements as defined in the most recent version (as of the time of project submittal) of the Reserve's Livestock Project Protocol.

OWD projects may choose to digest multiple feedstocks, some of which may be ineligible per the Performance Standard Test. Ineligible waste streams, e.g. fats, oils, and greases (FOG) residues and municipal biosolids (sludge), may be co-digested alongside eligible organic waste streams. However, any methane produced by these waste streams and destroyed by the project will not be eligible for crediting with CRTs by the Reserve.

The Performance Standard Test is applied at the time a project applies for registration with the Reserve. Eligible waste streams at the time a project is registered shall remain eligible throughout a project's first crediting period, regardless of changes in any future versions of this protocol. However, projects must demonstrate the eligibility of all new grocery store waste streams digested by the project according to the requirements above.

If a project developer wishes to apply for a second crediting period, the project must meet the eligibility requirements of the most current version of this protocol, including any updates to the Performance Standard Test.

3.5.2 The Legal Requirement Test

All projects are subject to a Legal Requirement Test to ensure that the GHG reductions achieved by a project would not otherwise have occurred due to federal, state, or local regulations, or other legally binding mandates. For OWD projects, the Legal Requirement Test is applied to each eligible waste stream digested by the project. A waste stream passes the Legal Requirement Test when:

1. There are no laws, statutes, regulations, court orders, environmental mitigation agreements, permitting conditions, or other legally binding mandates that require the diversion of the eligible waste stream from landfills, and/or that require the aerobic treatment or anaerobic digestion of the waste stream (see Sections 3.5.2.2 and 3.5.2.3, below, for further guidance on regulations affecting organic solid waste and industrial wastewater streams); or
2. The waste stream passes the Legal Requirement Test for Local Waste Diversion Mandates, as specified in Section 3.5.2.1 below.

To satisfy the Legal Requirement Test, project developers must submit a signed Attestation of Voluntary Implementation form[13] prior to the commencement of verification activities each time the project is verified (see Section 8). In addition, the project's Monitoring Plan (Section 6) must

[13] Form available at http://www.climateactionreserve.org/how/projects/register/project-submittal-forms/.

include procedures that the project developer will follow to ascertain and demonstrate that the project (and its associated waste streams) at all times passes the Legal Requirement Test.

If an OWD project digests an eligible organic waste stream that later becomes subject to a legal mandate requiring its diversion and/or aerobic treatment or anaerobic digestion, the organic waste stream will remain eligible up until the date that the legal mandate takes effect, unless the waste stream passes the Legal Requirement Test for Local Waste Diversion Mandates as specified in Section 3.5.2.1. Food and/or food-soiled paper waste streams that meet the requirements under Section 3.5.2.1 will remain eligible for the remainder of the crediting period, or until failure of the Legal Requirement Test with regards to state and/or federal regulations.

If an OWD project digests an eligible organic waste stream originating from a facility whose methane emissions are later included under an emissions cap (e.g. under a state or federal cap-and-trade program), the organic waste stream will remain eligible until the date that the emissions cap takes effect.

If an eligible organic waste stream digested by an OWD project becomes subject to a legally binding mandate requiring its diversion, anaerobic digestion, or aerobic treatment, the project may continue to report GHG reductions to the Reserve associated with other eligible waste streams that are not subject to such mandates. The Reserve will continue to issue CRTs for destruction of methane associated with the digestion of eligible waste streams that are not legally required to be diverted, anaerobically digested, or aerobically treated.

3.5.2.1 Legal Requirement Test for Local Waste Diversion Mandates

Local jurisdictions may have bans on certain types of waste going to landfill, or may have mandatory ordinances that require the diversion of organic solid wastes from landfills. If a local jurisdiction has established a mandatory ban on food waste and/or food-soiled paper disposal at landfills, or otherwise has enacted food and/or food-soiled paper waste diversion mandates, the food and/or food-soiled paper waste streams subject to the local diversion mandate passes the Legal Requirement Test if (and only if):

1. The project digesting the local food and/or food-soiled paper waste stream has an operational start date no later than 6 months after the date that the food waste diversion mandate is passed into law; and

2. The food and/or food-soiled paper waste stream continues to pass the Legal Requirement Test with regards to state and federal regulations.

3.5.2.2 Guidance on Solid Organic Waste Regulations

There are various state and local regulations, ordinances, and mandatory diversion targets that may obligate waste source producers or waste management entities to divert organic wastes away from landfills. An organic solid waste stream that is banned from landfilling, or is mandated to be managed in a system other than a landfill, fails the Legal Requirement Test.

State Regulations

States may have mandatory landfill diversion targets that require a percentage of waste generated to be diverted from landfills to alternative management systems. Although waste diversion targets may not specify a reduction or percentage of diversion that must be met from *organic* waste, these targets nevertheless provide strong regulatory incentives to divert all wastes (including organic) from landfills. Thus, organic waste originating from a jurisdiction that

is not in compliance with a mandated landfill diversion target does not pass the Legal Requirement Test until the date at which the jurisdiction comes into compliance with the mandated landfill diversion target.

Mandatory state diversion targets are not to be confused with state diversion goals. Should a state adopt a statewide waste diversion goal that does not impose penalties on jurisdictions for failing to meet diversion targets, then this state goal would not result in a failure of the Legal Requirement Test.

Local and Municipal Regulations and Ordinances

Local jurisdictions may have bans on certain types of waste going to landfill, or may have mandatory ordinances that require the diversion of organic solid wastes from landfills. If a local jurisdiction has established a mandatory ban on food waste disposal at landfills, or otherwise has enacted food waste diversion mandates, food waste streams originating from the jurisdiction fail the Legal Requirement Test.

3.5.2.3 Guidance on Industrial Wastewater Regulations

Federal Regulations

There are several federal regulations and standards for industrial wastewater discharge and pre-treatment. For example, Title 40 of the Code of Federal Regulations establishes pre-treatment standards for 35 different categories of industrial facilities. As of the date of adoption of this protocol, however, no federal regulations or standards require the installation of a BCS at industrial wastewater facilities, or the control of methane emissions to the atmosphere, so these regulations and standards do not affect application of the Legal Requirement Test.

State, Local, and Municipal Regulations

State regulations must be at least as stringent as any federal requirement, but states can adopt more stringent and additional requirements as well. Wastewater regulations vary between states and even between counties or cities within a single state. For example, the East Bay Municipal Utility District (EBMUD) in California sets Total Suspended Solids (TSS) limits between 30 and 3,500 mg/l depending on the industry while Sheboygan and Waukesha, Wisconsin set TSS limits at 234 and 340 mg/l, respectively. Each of these localities also sets different fees that are applied to discharges when wastewater pollution limits are exceeded. Limits and discharge fees range from a few thousand to a few million dollars, thereby encouraging reduction of wastewater discharges with a combination of prescriptive controls and economic motivation. Although certain regions may encourage reduction of wastewater discharge into public treatment systems through combination of lower discharge limits and higher fees, there are no regulations known as of the date of adoption of this protocol that specifically require the installation of a BCS at industrial wastewater facilities, or the control of methane emissions to the atmosphere.

3.6 Regulatory Compliance

As a final eligibility requirement, project developers must attest that the project is in material compliance with all applicable laws relevant to the project activity (e.g. air, water quality, wastewater discharge, nutrient management, safety, etc.) prior to verification activities commencing each time a project is verified. Project developers are required to disclose in writing to the verifier any and all instances of material non-compliance of the project with any law. If a verifier finds that a project is in a state of recurrent non-compliance or non-compliance that is the result of negligence or intent, then CRTs will not be issued for GHG reductions that

occurred during the period of non-compliance. Non-compliance solely due to administrative or reporting issues, or due to “acts of nature,” will not affect CRT crediting.

4 The GHG Assessment Boundary

The GHG Assessment Boundary delineates the GHG sources, sinks, and reservoirs (SSRs) that must be assessed by project developers in order to determine the net change in emissions caused by an OWD project. [14]

CO_2 emissions associated with the destruction of biogas are considered biogenic emissions[15] (as opposed to anthropogenic) and are not included in the GHG Assessment Boundary. This is consistent with the Intergovernmental Panel on Climate Change's (IPCC) guidelines.[16]

This protocol does not account for carbon dioxide reductions associated with displacing grid-delivered electricity. Combusting biogas to produce electricity for the grid would be defined as a complementary and separate renewable energy project. Likewise, this protocol does not account for carbon dioxide reductions associated with the displacement of fossil fuels used for mobile or stationary combustion sources. Utilizing biogas as replacement fuel for boilers, vehicles, or other equipment would be defined as a complementary and separate activity.

Figure 4.1 below provides a general illustration of the GHG Assessment Boundary, indicating which SSRs are included or excluded from the boundary.

Table 4.1 provides justification for the inclusion or exclusion of certain SSRs and gases from the GHG Assessment Boundary.

[14] The definition and assessment of Sources, Sinks, and Reservoirs (SSRs) is consistent with ISO 14064-2 guidance.
[15] The rationale is that carbon dioxide emitted during combustion represents the carbon dioxide that would have been emitted during natural decomposition of the solid waste. Emissions from the landfill gas control system do not yield a net increase in atmospheric carbon dioxide because they are theoretically equivalent to the carbon dioxide absorbed during plant growth.
[16] *IPCC Good Practice Guidance and Uncertainty Management in National Greenhouse Gas Inventories*; pg 5.10, ftnt 4. The rationale is that carbon dioxide emitted during combustion represents carbon dioxide that would have been emitted during the natural decomposition of the waste.

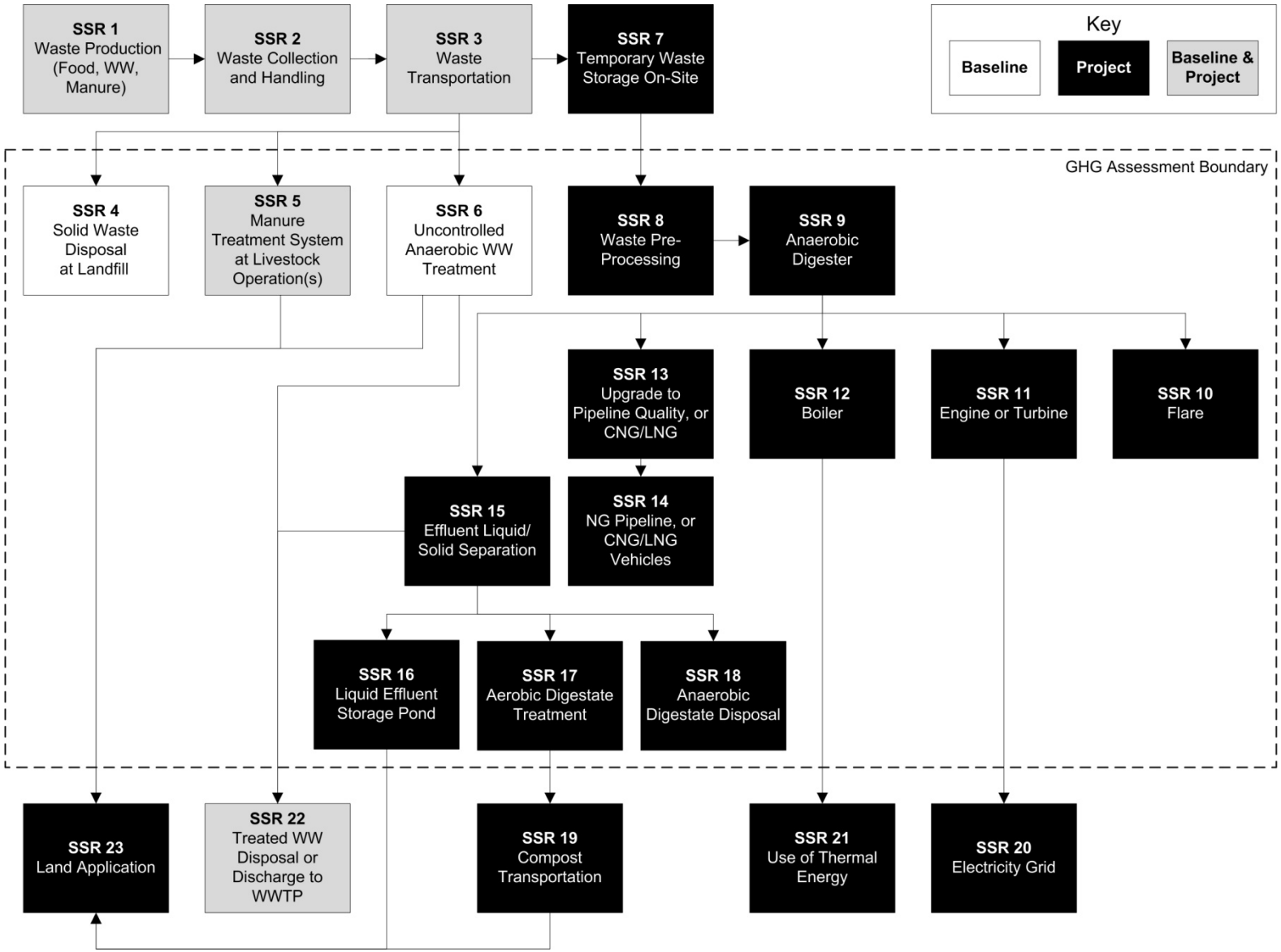

Figure 4.1. General Illustration of the GHG Assessment Boundary

Table 4.1. Description of all Sources, Sinks, and Reservoirs

SSR	Source Description	Gas	Included (I) or Excluded (E)	Quantification Method	Justification/Explanation
1. Waste Production	Fossil fuel emissions associated with the generation of waste	CO_2	E	N/A	Excluded, as project activity is unlikely to affect emissions relative to baseline activity.
		CH_4	E	N/A	Excluded, as project activity is unlikely to impact emissions relative to baseline activity.
		N_2O	E	N/A	Excluded, as project activity is unlikely to affect emissions relative to baseline activity.
2. Waste Collection and Handling	Fossil fuel emissions from mechanical systems used to collect, handle, and/or process waste prior to transportation, as well as GHG emissions resulting from the temporary storage of organic wastes.	CO_2	E	N/A	Excluded, as project activity is unlikely to affect emissions relative to baseline activity.
		CH_4	E	N/A	Excluded, as project activity is unlikely to affect emissions relative to baseline activity.
		N_2O	E	N/A	Excluded, as project activity is unlikely to affect emissions relative to baseline activity.
3. Waste Transportation	Fossil fuel emissions from transport of waste to final disposal/treatment system (e.g. garbage trucks, hauling trucks, wastewater pumps, etc.)	CO_2	E	N/A	Excluded for simplicity, as emissions from project activity will in most instances be less than or of comparable magnitude to baseline transportation emissions due the tendency to site digestion projects close to waste sources.[17] Also, the difference between project and baseline waste transportation distance can be large without significantly affecting a project's total net GHG reductions.
		CH_4	E	N/A	Excluded, as the net change in emissions from this source is assumed to be very small.
		N_2O	E	N/A	Excluded, as the net change in emissions from this source is assumed to be very small.
4. Solid Waste Disposal at Landfill	Emissions resulting from the anaerobic decay of food and food-soiled paper waste disposed of at a landfill	CO_2	E	N/A	Biogenic emissions are excluded.
		CH_4	I	**Baseline:** Modeled w/ FOD model based on site-specific measurement of the quantity of food waste diverted to the BCS, waste specific characteristic factors, and local climate **Project:** N/A	This is one of the primary sources of GHG emissions that may be affected by an OWD project.
		N_2O	E	N/A	Excluded, as this emission source is assumed to be very small.

[17] SAIC, Methane Avoidance from Composting Issue Paper (2009).

SSR	Source Description	Gas	Included (I) or Excluded (E)	Quantification Method	Justification/Explanation
5. Manure Treatment System at Livestock Operation(s)	Emissions resulting from the uncontrolled anaerobic treatment of manure. Emissions from all treatment and storage systems at each livestock operation must be accounted for per the Reserve's Livestock Project Protocol	CO_2	E	N/A	Biogenic emissions are excluded.
		CH_4	I	**Baseline:** Modeled according to LS Protocol using site-specific information **Project:** Modeled according to LS Protocol using site-specific information	This is one of the primary sources of GHG emissions that may be affected by an OWD project, if the project is co-digesting manure with eligible organic waste streams.
		N_2O	E	N/A	Excluded; this is conservative as anaerobic digestion treatment of manure is likely to reduce emissions.
6. Uncontrolled Anaerobic Wastewater Treatment	Emissions resulting from the pre-project anaerobic treatment of organic loaded agro-industrial wastewater	CO_2	E	N/A	Biogenic emissions are excluded.
		CH_4	I	**Baseline:** Modeled using WW stream specific COD samples and default values **Project:** N/A	This is one of the primary sources of GHG emissions that may be affected by an OWD project.
		N_2O	E	N/A	Excluded, as this emission source is assumed to be very small.
7. Temporary Waste Storage On-Site	If waste is temporarily stored on-site before digestion, GHG emissions may result if storage conditions are anaerobic	CO_2	E	N/A	Biogenic emissions are excluded.
		CH_4	E	N/A	Excluded, as this emission source is assumed to be very small. Waste is unlikely to be stored in uncontrolled anaerobic conditions due to odor issues, and incentive to capture the highest energy value of the feedstock.
		N_2O	E	N/A	Excluded, as this emission source is assumed to be very small.
8. Waste Pre-Processing	Emissions resulting from the use of fossil fuels or grid delivered electricity for waste pre-processing equipment	CO_2	I	**Baseline:** N/A **Project:** Estimated using fossil fuel use or electricity use data and appropriate emission factors	Depending on the specifics of project waste pre-processing practices, increases in GHG emissions from this source could be significant.
		CH_4	E	N/A	Excluded, as this emission source is assumed to be very small.
		N_2O	E	N/A	Excluded, as this emission source is assumed to be very small.
9. Anaerobic Digester	Fugitive emissions from the anaerobic digester due to biogas collection inefficiency and unexpected biogas venting events	CO_2	E	N/A	Biogenic emissions are excluded.
		CH_4	I	**Baseline:** N/A **Project:** Metered, assuming default digester gas collection efficiencies. Emissions from venting events are estimated based on metered data and digester design	Fugitive CH_4 emissions in the project case may be significant depending on the BCS collection efficiency; venting events must be quantified.
		N_2O	E	N/A	Excluded, as this emission source is assumed to be very small.

SSR	Source Description	Gas	Included (I) or Excluded (E)	Quantification Method	Justification/Explanation
10. Flare	Emissions resulting from the destruction of biogas in flare	CO_2	E	N/A	Biogenic emissions are excluded.
		CH_4	I	**Baseline:** N/A **Project:** Metered, assuming a default methane destruction efficiency	Project CH_4 emissions may be significant, depending on destruction efficiency of flare.
		N_2O	E	N/A	Excluded, as this emission source is assumed to be very small.
11. Engine or Turbine	Emissions resulting from the destruction of biogas in engine or turbine	CO_2	E	N/A	Biogenic emissions are excluded.
		CH_4	I	**Baseline:** N/A **Project:** Metered, assuming a default methane destruction efficiency	Project CH_4 emissions may be significant, depending on destruction efficiency of engine or turbine.
		N_2O	E	N/A	Excluded, as this emission source is assumed to be very small.
12. Boiler	Emissions resulting from the destruction of biogas in boiler or other destruction device	CO_2	E	N/A	Biogenic emissions are excluded.
		CH_4	I	**Baseline:** N/A **Project:** Metered, assuming a default methane destruction efficiency	Project CH_4 emissions may be significant, depending on destruction efficiency of boiler or other device.
		N_2O	E	N/A	Excluded, as this emission source is assumed to be very small.
13. Upgrade to Pipeline Quality or CNG/LNG	Emissions resulting from the use of fossil fuels or grid delivered electricity used to upgrade the quality of and transport the gas to the NG pipeline	CO_2	I	**Baseline:** N/A **Project:** Estimated using fossil fuel use or electricity use data and appropriate emission factors	Project CO_2 emissions resulting from on-site fossil fuel use and/or grid delivered electricity may be significant.
		CH_4	E	N/A	Excluded, as this emission source is assumed to be very small.
		N_2O	E	N/A	Excluded, as this emission source is assumed to be very small.
14. NG Pipeline, or CNG/LNG Vehicles	Emissions from compressors and other equipment associated with transporting the natural gas through the pipeline	CO_2	E	N/A	Excluded, as the change in emissions from this source is assumed to be very small.
		CH_4	I	**Baseline:** N/A **Project:** Metered, assuming a default value representing the methane leakage in a NG pipeline and the end-use methane combustion efficiency	Project CH_4 emissions may be significant, depending on efficiency of end-user destruction, as well as processing, transmissions, and distribution losses.
		N_2O	E	N/A	Excluded, as this emission source is assumed to be very small.
15. Effluent Liquid/Solid Separation	Emissions resulting from the burning of fossil fuels or use of grid delivered electricity for effluent solid separation equipment	CO_2	I	**Baseline:** N/A **Project:** Estimated using fossil fuel use or electricity use data and appropriate emission factors	Project CO_2 emissions resulting from on-site fossil fuel use and/or grid delivered electricity may be significant.
		CH_4	E	N/A	Excluded, as this emission source is assumed to be very small.
		N_2O	E	N/A	Excluded, as this emission source is assumed to be very small.

SSR	Source Description	Gas	Included (I) or Excluded (E)	Quantification Method	Justification/Explanation
16. Liquid Effluent Storage Pond	Emissions resulting from the open storage of the liquid component of digester effluent	CO_2	E	N/A	Biogenic emissions are excluded.
		CH_4	I	**Baseline:** Modeled using effluent stream specific COD samples and default values **Project:** N/A	A potentially significant source of GHG emissions depending on the specifics of the BCS system design.
		N_2O	E	N/A	Excluded, as this emission source is assumed to be very small.
17. Aerobic Digestate Treatment	Emissions resulting from the active composting of digestate, either on-site or off-site	CO_2	Fossil: I Biogenic: E	**Baseline:** N/A **Project:** Estimated using fossil fuel use or electricity use data and appropriate emission factors	Project CO_2 emissions resulting from on-site fossil fuel use and/or grid delivered electricity may be significant. Biogenic CO_2 emissions from aerobic treatment are excluded.
		CH_4	I	**Baseline:** N/A **Project:** Estimated using default emission factors based upon a tiered approach representing the risk of GHG emissions from the site-specific aerobic digestate treatment system	Project CH_4 emissions could be very small, but depend on the management of the composting process and feedstock, and are difficult to quantify on a standardized basis. Projects are required to account for potential emissions based on project-specific digestate management practices.
		N_2O	I	**Baseline:** N/A **Project:** Estimated using default emission factors based upon a tiered approach representing the risk of GHG emissions from the site-specific aerobic digestate treatment system	Project N_2O emissions could be very small, but depend on the management of the composting process and feedstock, and are difficult to quantify on a standardized basis. Projects are required to account for potential emissions based on project-specific digestate management practices.
18. Anaerobic Digestate Disposal	Emissions from the disposal of digestate material at a landfill or other anaerobic disposal system	CO_2	E	N/A	Biogenic emissions are excluded.
		CH_4	I	**Baseline:** N/A **Project:** Modeled w/ FOD model based on site-specific measurement of the quantity of digestate material disposed anaerobically, conservative default digestate characteristic factors, and local climate	If digestate is disposed of at a landfill, fugitive emissions under the project could be significant.
		N_2O	E	N/A	Excluded, as this emission source is assumed to be very small.
19. Compost Transport	Fossil fuel emissions from the transport of the finished compost to the site of end-use	CO_2	E	N/A	Excluded because the difference in baseline and project case emissions is expected to be insignificant, In the absence of compost, other fertilizer products would be transported to the site of application.
		CH_4	E	N/A	Excluded, as this emission source is assumed to be very small.
		N_2O	E	N/A	Excluded, as this emission source is assumed to be very small.

SSR	Source Description	Gas	Included (I) or Excluded (E)	Quantification Method	Justification/Explanation
20. Electricity Grid	Fossil fuel emissions from electricity generation displaced by the project	CO_2	E	N/A	This protocol does not cover displacement of GHG emissions from using biogas instead of fossil fuels in electrical generating equipment.
		CH_4		N/A	
		N_2O		N/A	
21. Use of Thermal Energy	Fossil fuel emissions from thermal energy generation displaced by the project	CO_2	E	N/A	This protocol does not cover displacement of GHG emissions from using biogas instead of fossil fuels in thermal energy generating equipment.
		CH_4		N/A	
		N_2O		N/A	
22. Treated Wastewater Disposal or Discharge to WWTP	Emissions from treated agro-industrial wastewater disposed of, or discharged into, the natural environment or a sewer system	CO_2	E	N/A	Excluded, as project activity is unlikely to increase emissions from wastewater disposal relative to baseline.
		CH_4	E	N/A	
		N_2O	E	N/A	
23. Land Application	Emissions and Sinks related to the land application of treated manure, organic wastewater, and finished compost	CO_2	E	N/A	Excluded, as project activity is unlikely to increase emissions relative to baseline. Furthermore, the application of finished compost as soil amendment or mulch on agricultural lands can result in significant GHG benefits due to avoided fossil based fertilizer use, increased carbon sequestration, increased water retention in soils, and other impacts. This protocol does not address the GHG benefits of compost end-use, which is considered a complementary and separate activity.
		CH_4	E	N/A	
		N_2O	E	N/A	

5 Quantifying GHG Emission Reductions

GHG emission reductions from an OWD project are quantified by comparing actual project emissions to baseline emissions from anaerobic waste management of the eligible waste streams. Baseline emissions are an estimate of the GHG emissions from sources within the GHG Assessment Boundary (see Section 4) that would have occurred in the absence of the OWD project. Project emissions are actual GHG emissions that occur at sources within the GHG Assessment Boundary. Project emissions must be subtracted from the baseline emissions to quantify the project's total net GHG emission reductions (Equation 5.1). GHG emission reductions must be quantified and verified at least every 12 months. Project developers may choose to quantify and verify GHG emission reductions on a more frequent basis if they desire. The length of time over which GHG emission reductions are quantified and verified is called the "reporting period."

The Reserve requires all projects to compare the calculated baseline emissions for the reporting period, as calculated in Section 5.1, to the ex-post metered quantity of methane that is destroyed in the biogas control system over the same period. The lesser of the two values must be used to estimate total baseline emissions for the reporting period. Equation 5.1 below provides the quantification approach that shall be used for calculating the emission reductions from OWD project activities. [18]

[18] The Reserve's GHG reduction calculation method for OWD projects is derived from the Kyoto Protocol's Clean Development Mechanism (AM0025 V.10, AM0073 V.1, ACM0014 V.2.1, AMS-III.E V.15.1, AMS-III.F V.6.0, and AMS-III.H V.9.0), and also draws from the Regional Greenhouse Gas Initiative (RGGI) Model Rule, the US EPA Inventory of US GHG Emissions and Sinks 1990-2006, and the 2006 IPCC Guidelines for National GHG Inventories

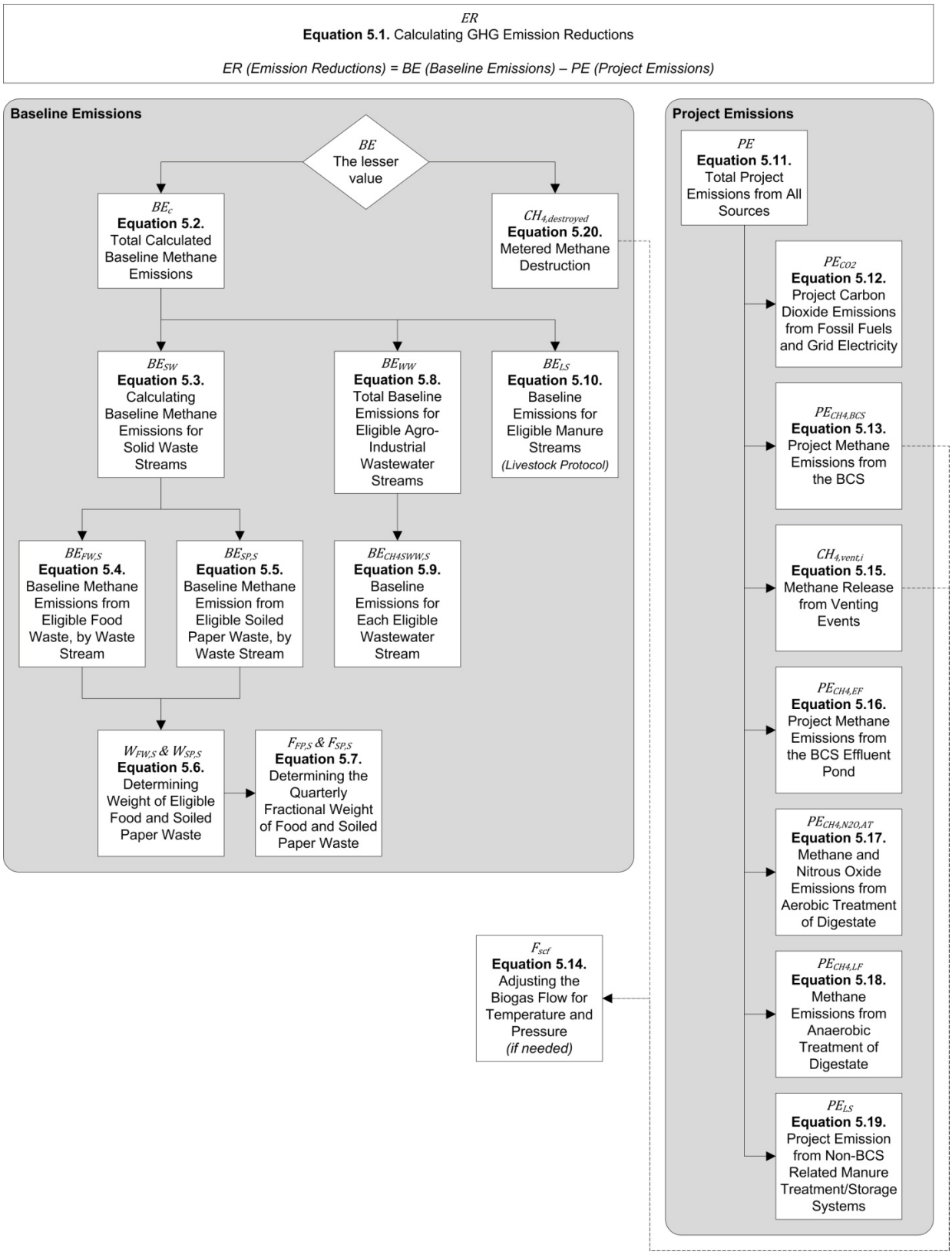

Figure 5.1. Organizational Chart of Equations in Section 5

Equation 5.1. Calculating GHG Emission Reductions

$$ER = BE - PE$$

Where,			Units
ER	=	The total emission reductions for the reporting period	$MTCO_2e$
BE	=	The total baseline emissions for the reporting period, from all SSRs in the GHG Assessment Boundary	$MTCO_2e$
PE	=	The total project emissions for the reporting period, from all SSRs in the GHG Assessment Boundary (as calculated in Section 5.2)	$MTCO_2e$

$BE =$ The lesser of the two values: BE_c or $CH_{4,\ destroyed}$

Where,			Units
BE_c	=	The total calculated baseline emissions for the reporting period, from all SSRs in the GHG Assessment Boundary (as calculated in Section 5.1)	$MTCO_2e$
$CH_{4,destroyed}$	=	The aggregated quantity of methane destroyed by the BCS during the reporting period (as calculated in Section 5.3)	$MTCO_2e$

5.1 Quantifying Baseline Emissions

Total baseline emissions must be estimated by calculating and summing the expected baseline emissions for all relevant SSRs (as indicated in Table 4.1), during the reporting period.

The calculations used to estimate baseline emissions will depend on the management option(s) that would have been used to treat and/or dispose of eligible organic waste streams in the absence of an OWD project. Different baseline management options are assumed depending on the type of eligible waste stream involved:

- *MSW Food Waste and Food-Soiled Paper Waste*: Uneaten food, spoiled food, food preparation wastes, and non-recyclable food-soiled paper wastes from homes, restaurants, kitchens, grocery stores, campuses, cafeterias, and similar institutions is predominantly disposed of at managed landfills. Nation-wide, less than 3% of MSW food waste is currently diverted from landfills.[19] Thus, for the purposes of this protocol, the baseline emissions from MSW food waste streams are calculated based on the assumption that the waste would have been disposed of at a landfill in the absence of the project.[20] See Section 5.1.1 for the calculation procedure that must be used to quantify baseline emissions for eligible food and food-soiled paper waste streams.

- *Agro-industrial Wastewater*: Organic loaded wastewater from industrial or agricultural processing operations, if treated on-site at the facility, may be treated in uncontrolled anaerobic or semi-anaerobic lagoons, ponds, or tanks. Thus, for the purposes of this

[19] U.S. EPA, *Municipal Solid Waste in the United States -2007 Facts and Figures.* Table 2, pg. 36.
[20] Food waste streams originating from grocery stores or supermarkets must have their pre-project disposal documented according to Section 6.1.2.

protocol, the baseline emissions from agro-industrial wastewater streams are calculated based on the wastewater treatment system in place prior to the installation of the BCS. The project developer must demonstrate that the pre-project wastewater treatment system utilized anaerobic treatment processes, and did not incorporate methane capture and control technologies. If this cannot be demonstrated for a particular wastewater stream, baseline emissions for the particular wastewater stream are assumed to be zero. See Section 5.1.2 for the calculation procedure that must be used to quantify baseline emissions for eligible wastewater streams.

- *Livestock manure*: For projects that co-digest eligible organic waste streams together with livestock manure, the baseline emissions for manure management draw from the Reserve's Livestock Project Protocol. Each livestock operation contributing manure waste to the digestion project shall account for baseline emissions from all sources within the GHG Assessment Boundary. See Section 5.1.3 of this protocol for requirements for calculating baseline emissions from manure management.

If the OWD project co-digests ineligible waste streams together with eligible organic waste streams, baseline emissions for all ineligible waste streams are assumed to be zero.

As shown in Equation 5.2, baseline emissions equal:

- The methane emissions from the decay of food and food-soiled paper waste deposited in a landfill (SSR 4), plus
- The methane emissions from anaerobic wastewater treatment of agro-industrial wastewaters (SSR 6), plus
- The methane generated by pre-project manure management systems (SSR 5)

Equation 5.2. Total Calculated Baseline Methane Emissions

$$BE_c = (BE_{SW} + BE_{WW} + BE_{LS})$$

Where,			Units
BE_c	=	The total calculated baseline emissions from all SSRs in the GHG Assessment Boundary during the reporting period	$MTCO_2e$
BE_{SW}	=	The total baseline emissions during the reporting period, for eligible solid waste (food and food-soiled paper) streams (SSR 4)	$MTCO_2e$
BE_{WW}	=	The total baseline emissions during the reporting period, for eligible agro-industrial wastewater streams (SSR 6)	$MTCO_2e$
BE_{LS}	=	The total sum of the calculated baseline emissions during the reporting period, for all livestock operations contributing manure to the digester (SSR 5)	$MTCO_2e$

5.1.1 Baseline Emissions from Eligible Food and Food-Soiled Paper Waste Streams (SSR 4)

Equations 5.3 and 5.4 represent the FOD model calculations that must be used to estimate baseline emissions for both the food waste component and the soiled paper component of the eligible waste that is digested by the project. For the calculation, the total weight of the food and soiled paper waste from each eligible waste stream must be aggregated over the reporting period. The inputs to the FOD model include:

- The State Waste Incineration (WTE) rate – the percentage of the waste that would have gone to a waste incineration plant instead of a landfill on a state-by-state basis
- The Landfill Gas Collection Efficiency (LCE) – the percentage of landfill gas that is captured and controlled due to the presence of a landfill gas collection and control system (see Box 5.1 for further information on the LCE parameter)
- The waste-specific fraction of total Degradable Organic Carbon (DOC_S), and fraction of DOC_S that is degradable under anaerobic conditions (DOC_f)
- The decay rate of the waste, k, which is a function of both the type of waste and external climate of the region where the waste would have been landfilled

The FOD model estimates the methane emissions that would have been emitted to the atmosphere over a period of ten years following the year in which the waste is diverted to the project's BCS.[21]

Equation 5.3. Calculating Baseline Methane Emissions for Solid Waste Streams (SSR 4)

$$BE_{SW} = \sum_{s} BE_{CH_4,S}$$

Where,			Units
BE_{SW}	=	The total sum of the baseline emissions from solid waste (food waste and soiled paper waste) during the reporting period	$MTCO_2e$
$BE_{CH4,S}$	=	The baseline methane emissions from digested waste stream 'S' during the reporting period	$MTCO_2e$

$$BE_{CH_4,S} = BE_{FW,S} + BE_{SP,S}$$

Where,			Units
$BE_{FW,S}$	=	The baseline methane emissions from the food waste component of eligible waste stream 'S' that is digested during the reporting period	$MTCO_2e$
$BE_{SP,S}$	=	The baseline methane emissions from the soiled paper component of eligible waste stream 'S' that is digested during the reporting period	$MTCO_2e$

[21] The FOD model used in Equation 5.4 is referenced from the UNFCCC Clean Development Mechanism (CDM) approved methodology for calculating avoided methane emissions from waste diversion (CDM Annex 10 – Tool to determine methane emissions avoided from dumping waste at a SWDS (V4.0)). However, the model has been adapted in order to quantify emissions from a full ten years of waste degradation upfront rather than distributed on an annual basis. Due to modeling uncertainty, it is conservative to limit the calculation time frame to ten years, although waste would likely continue to break down in a landfill situation for much longer than ten years.

Equation 5.4. Baseline Methane Emissions from Eligible Food Waste, by Waste Stream

$$BE_{FW,S} = 0.9 \times W_{FW,S} \times (1 - WTE_S) \times L_{o,FW,S} \times \rho \times FE_{FW,S} \times 21$$

Where,			Units
0.9	=	Model correction factor to account for model and waste composition uncertainties related to waste composition and waste characteristics[22]	Fraction
$W_{FW,S}$	=	The aggregated weight of eligible food waste (on a wet basis) from eligible waste stream 'S' that is digested by the project during the reporting period. See Section 5.1.1.1 for guidance on determining the weight of eligible food waste	MT of Food Waste (wet weight)
WTE_S	=	The fraction of the waste from eligible waste stream 'S' that would have been incinerated at a Waste to Energy plant in lieu of being landfilled. This fraction is equal to the state-specific fraction of total generated waste that is incinerated. Referenced by waste origination state from Table B.2 in Appendix B	Fraction
$L_{o,FW,S}$	=	The methane potential of food waste, measured on a wet basis. Projects must use a value of 128 for all food waste streams[23]	m^3CH_4/MT of Food Waste (wet weight)
ρ	=	The density of methane, equal to 0.000674	$MTCH_4/m^3$
$FE_{FW,S}$	=	The fraction of the methane generated that is emitted to the atmosphere over a ten year time horizon, as calculated using the First Order Decay function. The fraction emitted to the atmosphere is a function of the decay rates of food waste, the landfill gas collection assumptions (See Box 5.1), and the amount of methane generated that is oxidized in the cover soil	Fraction
21	=	The global warming potential (GWP) of methane	$MTCO_2e$ / $MTCH_4$

[22] As per CDM Annex 10 – Tool to determine methane emissions avoided from dumping waste at a SWDS (V4.0) http://cdm.unfccc.int/methodologies/PAmethodologies/tools/am-tool-04-v4.pdf/history_view
[23] U.S. EPA Inventory of Greenhouse Gas Emissions and Sinks, 1990-2008. Annex 3, Ch. 3.14, pg. A-295.

Equation 5.4. (Continued)

$$FE_{FW,S} = \sum_{x=1}^{10} \left[e^{-k_{FW,S} \cdot (x-1)} \times (1 - e^{-k_{FW,S}}) \times \left(1 - (GC_S \times LCE_x)\right) \right] \times (1 - OX)$$

Where,			Units
e	=	A mathematical constant, approximately equal to 2.71828	None
$k_{FW,S}$	=	The decay rate for food waste stream 'S'. The decay rate is a function of the climatological characteristics of the region where the waste is landfilled. Referenced from Table B.1 by waste type and climate category, which is referenced from Figure B.1	yr^{-1}
x	=	The placeholder for the iterative calculation. The FOD equation calculates emissions out over a period of ten years (x = 1 to 10) following the year in which the waste is initially diverted to the digester. The ten year calculation is summed and applied to the total baseline emissions for the current reporting period	None
GC_S	=	The gas collection factor for the waste stream 'S'. The gas collection factor is equal to the fraction of waste disposed at landfills with gas collection systems in the state from which the waste stream 'S' originates. Referenced by state from Table B.2 in Appendix B	Fraction
$LCE_{,x}$	=	The fraction of methane that would be captured and destroyed by LFG collection systems in the year x, starting with the year that the waste is diverted to the project (x =1) and ending with year x = 10. All projects shall use a value of '0.0' for the first two years of calculated waste decay (x=1 to 2), a value of '0.5' for the third year (x=3), a value of 0.75 for years 4-7 (x=4 to 7), and a value of 0.95 for the remaining years of decay until the end of the calculation period (x =8 to 10). See Box 5.1 for a discussion on LCE assumptions[24]	Fraction
OX	=	Factor for the oxidation of methane by cover soil bacteria. A value of 0.1 shall be used[25]	Fraction

[24] The Reserve will periodically re-assess the LCE default parameters in order to ensure that landfill gas collection assumptions remain conservative and accurate.

[25] As per the Reserve Landfill Project Protocol V3.0, CDM Annex 10 – Tool to determine methane emissions avoided from dumping waste at a SWDS (V4.0), and U.S. EPA *Solid Waste Management and Greenhouse Gases: A Lifecycle Assessment of Emissions and Sinks,* Chapter 6, Pg. 87, ftnt27.

Equation 5.5. Baseline Methane Emissions from Eligible Soiled Paper Waste, by Waste Stream

$$BE_{SP,S} = 0.9 \times W_{SP,S} \times (1 - WTE_S) \times L_{o,SP} \times \rho \times FE_{SP,S} \times 21$$

Where,			Units
$W_{SP,S}$	=	The aggregated weight of eligible soiled paper waste (on a wet basis) from eligible waste stream 'S' that is digested by the project during the reporting period. See Section 5.1.1.1 for guidance on determining the weight of eligible soiled paper waste	MT of soiled paper (wet weight)
$L_{o,SP,S}$	=	The methane potential of soiled paper waste, measured on a wet basis. Projects must use a value of 310 for all soiled paper waste streams [26]	m^3CH_4/MT of food waste (wet weight)
$FE_{SP,S}$	=	The fraction of the methane generated that is emitted to the atmosphere over a ten year time horizon, as calculated using the First Order Decay function. The fraction emitted to the atmosphere is a function of the decay rates of soiled paper waste, the landfill gas collection assumptions (See Box 5.1), and the amount of methane generated that is oxidized in the cover soil	Fraction

$$FE_{SP,S} = \sum_{x=1}^{10} \left[e^{-k_{SP,S} \cdot (x-1)} \times (1 - e^{-k_{SP,S}}) \times \left(1 - (GC_S \times LCE_x)\right) \right] \times (1 - OX)$$

Where,			Units
$k_{SP,S}$	=	The decay rate for soiled paper waste stream 'S'. The decay rate is a function of the climatological characteristics of the region where the waste is landfilled. Referenced from Table B.1 by waste type and climate category, which is referenced from Figure B.1	yr^{-1}

[26] U.S. EPA *Solid Waste Management and Greenhouse Gases: A Lifecycle Assessment of Emissions and Sinks,* Chapter 6, Exhibit 6-3. The Value represents the methane potential of 'office paper'.

Box 5.1. Organic Waste Digestion Protocol Treatment of Landfill Gas Collection Systems

Landfill Gas Collection System Assumptions

The baseline emission calculation excludes methane that would have otherwise been captured and controlled by an active landfill gas collection system. The Reserve acknowledges that many landfills have active gas collection and control systems in operation, of which the majority are in place due to federal, state, or local regulations.[27] Due to the uncertainty and difficulty associated with tracking and verifying pre-project waste disposal activities on a project-by-project basis, this protocol utilizes a conservative and highly standardized approach to determining the landfill gas collection efficiency (LCE) parameter for eligible waste baseline emission calculations that incorporates the most up-to-date scientific understanding of landfill gas collection efficiencies and state-specific landfill gas collection practices.

Specifically, the baseline calculation reflects the following assumptions:

1. The fraction of each eligible waste stream digested by the project that would have been disposed at a landfill with a collection system in the absence of the project is equal to the fraction of total disposed waste that is accepted at landfills with known or potential landfill gas collection systems on a state-specific basis. The state-specific gas collection fraction (GC_S), is referenced from Table B.2 in Appendix B based on where each eligible waste stream originated.[28] The fraction of each eligible waste stream digested by the project that would have been disposed at a landfill without gas collection ($1-GC_S$) is assumed to have a landfill gas collection efficiency of 0%.

2. The Landfill Gas Collection Efficiency (LCE) parameter assumes landfills with gas collection will have a phased gas collection efficiency consistent with common landfill gas management.[29] The LCE_x parameter in Equations 5.3 and 5.4 shall be equal to zero for a period of two full years following the diversion and digestion of the waste, followed by 50% collection efficiency in the third year, 75% collection in years 4-7, and 95% collection for years 8-10.

5.1.1.1 Determining the Weight of Eligible Food Waste

Eligible waste is likely to be delivered to the OWD project mixed with varying quantities and types of ineligible organic and/or inorganic materials. The type and quantity of eligible and ineligible waste contained in each delivery will depend primarily on the waste generation source where the material originates, and the methods by which organics are separated, or not, from the upstream waste. Depending on the operational design of the OWD project, the project might accept non-source separated MSW streams (mixed MSW) and/or Source Separated Organics (SSO) streams.

The project must track delivery of waste from each eligible waste stream and determine the percentages of MSW food waste and soiled paper in each eligible waste stream according to Equation 5.6 below. If the project is using quarterly food and soiled paper waste fractions, Equation 5.5 must be performed quarterly and summed over the entire reporting period to

[27] Per the Performance Standard Analysis conducted for the Reserve's Landfill Project Protocol, V 2.0. See Appendix C of the Reserve's Landfill Project Protocol.
[28] The GC_S fraction was determined using data from the 2008 U.S. EPA Landfill Methane Outreach Program (LMOP) database.
[29] M.Barlaz et al. Memorandum to Jennifer Brady, Office of Resource Conservation and Recovery, US EPA: *WARM Component-Specific Decay Rate Methods.* (2009).

obtain the total weight of food and soiled paper waste digested by the project over the reporting period.

Equation 5.6. Determining Weight of Eligible Food and Soiled Paper Waste

$$W_{FW,S} = W_{T,S} \times FD_S \times F_{FW,S}$$

Where,			Units
$W_{FW,S}$	=	The aggregated weight of eligible food waste (on a wet basis) from waste stream 'S' that is digested by the project during the reporting period	MT food waste
$W_{T,S}$	=	The aggregated total weight of waste (on a wet basis) from waste stream 'S' that is delivered to the facility during the reporting period	MT
FD_S	=	The fraction of the waste stream 'S' that is digested during the reporting period	Fraction
$F_{FW,S}$	=	The food waste fraction of waste stream 'S'. The fraction must be determined based on the corresponding methods described in Sections 5.1.1.2 and 5.1.1.3 below, according to the type of waste delivered to the site	Fraction

$$W_{SP,S} = W_{T,S} \times FD_S \times F_{SP,S}$$

Where,			Units
$W_{SP,S}$	=	The aggregated weight of eligible soiled paper waste (on a wet basis) from waste stream 'S' that is digested by the project during the reporting period	MT soiled paper
$F_{SP,S}$	=	The soiled paper waste fraction of the waste stream 'S'. The fraction must be determined based on the corresponding methods described in Sections 5.1.1.2 and 5.1.1.3 below, according to the type of waste delivered to the site	Fraction

5.1.1.2 Determining the Fraction of Eligible Waste in a Mixed MSW Waste Stream (Non-Source Separated)

If a digester project is receiving a mixed MSW stream(i.e. non-source separated), the fraction of eligible food and soiled paper waste in the mixed stream shall be determined through the use of food waste and paper waste composition factors based on either a site-specific waste characterization study, or a published state or municipal MSW waste characterization study. The published waste characterization study must have been conducted no more than 2 years prior to the current project reporting year.

If using a site-specific food waste composition factor, the site-specific waste characterization study must be performed in accordance with the site-specific waste sampling requirements in Section 5.1.1.4.

5.1.1.3 Determining the Fraction of Eligible Waste in a Source Separated Organics (SSO) Waste Stream

SSO waste is generated by both the commercial and residential sectors. Residential food waste collection programs are likely to produce a waste stream that is a combination of yard waste, food waste, and soiled paper. In certain regions and/or seasons, residential SSO may have limited yard waste material and may be primarily food and soiled paper. Commercial sector waste generators are broken down further into separate categories (see Table 5.1). The types of commercial generators listed in Table 5.1will primarily produce waste streams that consist of food waste and soiled paper in varying proportions.

5.1.1.3.1 Residential SSO Waste Stream Characterization

In order to determine the percent of food and soiled paper waste in a residential SSO waste stream, projects must use local or site-specific waste characterization data to determine the average fraction of food waste and soiled paper waste by weight collected by the residential diversion program. If available, projects may use local municipal waste characterization data provided by the local jurisdiction or a representative entity to quantify the proportion by weight of both food waste and soiled paper in the residential SSO waste stream. If local data are not available, projects must conduct site-specific waste sampling for each residential waste stream digested at the facility in accordance with the requirements in Section 5.1.1.4

5.1.1.3.2 Commercial SSO Waste Stream Characterization

Commercial SSO waste is primarily food and food-soiled paper waste (excluding corrugated cardboard, which would be an ineligible waste type). By volume, commercial waste streams would likely contain a high proportion of soiled paper wastes to food waste, however on a weight basis it would be expected that the paper component of the waste stream would constitute a much smaller proportion due to the fact that food waste is very high in moisture, whereas paper material would be much less dense with a much lower moisture content.

If an SSO collection route delivers eligible SSO waste to the project that is collected from multiple commercial facilities across different categories, then the proportional weight of food waste and soiled paper waste in the mixed commercial SSO stream must be determined by conducting site-specific waste characterization in accordance with the requirements in Section 5.1.1.4. If a commercial SSO waste stream is delivered to the facility from a single facility, or an exclusive aggregate of facilities within the same category (e.g. a collection route servicing restaurants only), the project may apply the default factors rather than site-specific waste characterization.[30] The default values must be applied to the weight of the waste stream following initial removal of contaminants and/or ineligible SSO material (e.g. corrugated cardboard boxes).

[30] Default values are developed by determining the ratio of Misc. Paper and Composite Paper to Food Waste generated within each waste generator category. Each category assumes 10% ineligible feedstock by weight as a conservativeness factor. The composition data is taken from California's Targeted Statewide Waste Characterization Study: Waste Disposal and Diversion Findings for Selected Industry (Cascadia Consulting Group), 2006. The data is specific to California, however the types and proportions of material generated within a category would be expected to be relatively independent of region.

Table 5.1. Waste Generator Categories and Default Food and Soiled Paper Fractions by Weight

Waste Generator Category	Fraction of Food Waste by Weight	Fraction of Soiled Paper by Weight
Restaurants/Cafeterias/Dining Halls/Other Food Service	0.80	0.10
Super Markets and Grocery Stores	0.80	0.10
Food Wholesale Distributors	0.70	0.20
Special Events and Public Venues	0.60	0.30
Other Commercial (Hotels, Office Buildings, Wholesale Distributors)	0.50	0.40

5.1.1.4 Site-Specific Waste Characterization Procedure

All site-specific waste characterization shall be done according to the following requirements[31]:

- Each waste stream shall have a minimum of 2 sampling runs per quarter, with each run consisting of at least 4 separate samples, for a total of 8 waste characterization samples per quarter

- All waste characterization samples shall be at least 100 lb weight (wet) of mixed material drawn from a recent delivery of the SSO or MSW stream in question prior to mixing with other waste streams.

- Each waste sample shall be sorted into the following categories: food waste, soiled paper, other ineligible material.

- For each sample, the project developer must quantify and record the proportional weight of food waste and of soiled paper as compared to the total weight of the sample.

- The project must quantify the food waste proportional weight and soiled paper proportional weight ($F_{FW,S}$ and $F_{SP,s}$), on a quarterly basis by using Equation 5.7 below to determine the 1-sided lower 90% confidence bound based on the 8 recorded proportional weight results.

Written records and photo documentation must be recorded and retained for verification purposes. Section 6.1.1.1 provides requirements for site-specific waste characterization photo documentation and record keeping.

For commercial SSO waste streams delivered to the project from a single facility, the site-specific waste characterization events may occur on site or at the commercial waste generation facility.

[31] It is recommended, but not required, that the waste characterization be performed by a qualified third party service provider.

Equation 5.7. Determining the Quarterly Fractional Weight of Food and Soiled Paper Waste

$F_{FW,S,}$ and $F_{SP,S,}$	=	The quarterly fractional weight of food and soiled paper waste (respectively) from waste stream 'S', equal to the 1-sided 90% lower confidence bound of the 8 quarterly fractional weights	Fraction

$$90\%LCL = mean - t_{value} \times \left(\frac{SD}{\sqrt{n}} \right)$$

Where,			Units
mean	=	The quarterly fractional weight sample mean (of food or soiled paper waste) based on the 8 sampling events	Fraction
t_{value}	=	The 1-sided 90% t-value coefficient for a data set with degrees of freedom *df* (use Excel feature: =TINV(0.2,df).	Fraction
SD	=	Standard deviation of the quarterly fractional weight (of food or soiled paper waste)	Fraction
n	=	Sample size (must be equal to 8 at a minimum)	N/A
df	=	Degrees of freedom (= n-1)	N/A

5.1.2 Baseline Emissions from Eligible Agro-Industrial Wastewater Streams (SSR 6)

The calculations to determine the baseline methane emissions from agro-industrial wastewater streams that otherwise would have been treated in an anaerobic pond, lagoon, or tank are presented in Equation 5.8 and Equation 5.9 below. These equations shall be used to calculate the baseline emissions for each eligible wastewater stream that is digested in the project's BCS for each reporting period. Baseline emissions will be zero for any wastewater streams that, in the absence of the project, would have been treated at a wastewater treatment plant that collects and combusts methane gas.

The following equations calculate methane emissions that would have occurred during the reporting period from anaerobic decomposition of the waste in an anaerobic storage/treatment lagoon, pond, or tank by utilizing waste-specific inputs. The waste specific inputs include:

- The Chemical Oxygen Demand (COD) of the wastewater as sampled – representing the organic load of the wastewater
- The Methane Correction Factor (MCF) – a function of the baseline storage/treatment system
- The methane producing capacity of the wastewater (B_o) – a function of the type of wastewater

Equation 5.8 and Equation 5.9 present the calculations that shall be used to quantify baseline emissions from all eligible wastewater streams during the reporting period. Each wastewater stream 'S' shall be sampled for COD content monthly according the guidance provided in Section 6.1.3.1.

Equation 5.8. Total Baseline Emissions for Eligible Agro-Industrial Wastewater Streams (SSR 6)

$$BE_{WW} = \sum_{S} BE_{CH_4,WW,S}$$

Where,			Units
BE_{WW}	=	The total sum for the reporting period of the baseline emissions from each eligible wastewater stream entering the digester	$MTCO_2e$
$BE_{CH4,WW,S}$	=	The baseline methane emissions from wastewater stream 'S', for the reporting period, calculated per Equation 5.9 below	$MTCO_2e$

Equation 5.9. Baseline Emissions for Each Eligible Wastewater Stream

$$BE_{CH_4,WW,S} = B_{o,WW,S} \times MCF_{AT,S} \times 21 \times UF_{BL} \times \sum_{i} (Q_{WW,S,i} \times COD_{WW,S,i})$$

Where,			Units
$BE_{CH4,WW,S}$	=	The baseline methane emissions, for the reporting period, from eligible wastewater stream 'S'	$MTCO_2e$
$B_{o,WW,S}$	=	The methane producing capacity of the wastewater stream 'S'. Project developers may use site-specific values that are determined based on the sampling approach provided in Section 6.1.3.2. The wastewater stream must be sampled prior to mixing with other residues. Alternatively, a conservative default value of 0.21 may be used[32]	$MTCH_4$ / MTCOD
$MCF_{AT,S}$	=	The Methane Correction Factor of the anaerobic treatment lagoon, pond, or tank where the waste was treated pre- project, equal to the lower bound value for the treatment system as provided in Table B.4 in Appendix B	Fraction
21	=	The global warming potential for methane	$MTCO_2e/MTCH_4$
UF_{BL}	=	The baseline uncertainty factor to account for model uncertainties. Equal to 0.89[33]	Fraction
$Q_{ww,S,i}$	=	The volume of wastewater from stream 'S' in month 'i'	m^3
$COD_{WW,S,i}$	=	The chemical oxygen demand of the untreated wastewater stream 'S' for month 'i'. COD must be sampled prior to mixing with other residues, and must be sampled according to the guidance in Section 6.1.3.1 for each wastewater stream 'S' on a monthly basis	$MTCOD/m^3$

[32] Per CDM ACM0014 V.2.1 and CDM AMS III.F V.6
[33] Per Clean Development Mechanism (CDM) Methodology III.H, V.16.

5.1.3 Baseline Emissions from Manure Treatment Systems (SSR 5)

For projects that are co-digesting manure alongside eligible organic waste streams, project developers calculate the baseline emissions for the reporting period from all manure waste streams according to the pre-project manure management system in place at the livestock operation from which the manure is sourced. All livestock operations contributing waste to the digester must calculate baseline emissions from all manure management systems in accordance with the Reserve Livestock Project Protocol's baseline calculation approach (using the version of the Livestock Project Protocol that is current at the time of project submittal). If a project developer can demonstrate that a particular manure management system is not affected by the project activity, then this system can be excluded from the baseline calculation. Baseline emissions from all livestock operations must be aggregated per Equation 5.10 below.

Equation 5.10. Baseline Emissions for Eligible Manure Streams (SSR 5)

$$BE_{LS} = \sum_{S} BE_{CH_4,LS,S}$$

Where,			Units
BE_{LS}	=	The total sum of the calculated baseline emissions during the reporting period, for all livestock operations contributing manure to the digester (SSR 5)	
$BE_{CH4,LS,S}$	=	The baseline methane emissions from all affected manure management systems S', for the reporting period, calculated per the Livestock Project Protocol	$MTCO_2e$

5.2 Quantifying Project Emissions

Project emissions are actual GHG emissions that occur within the GHG Assessment Boundary as a result of project activity. Project emissions must be quantified every reporting period on an *ex-post* basis.

As shown in Equation 5.11, project emissions equal:

- The carbon dioxide emissions from mobile and stationary combustion of fossil fuels and/or the use of grid delivered electricity (SSRs 3, 8, 13,15,17), plus
- The amount of methane created by the biogas control system that is not captured and destroyed by the control system (SSRs 9,10,11,12,14), plus
- The methane generated by the digester effluent storage pond (SSR 16), plus
- The methane and nitrous oxide produced by the aerobic treatment of the residual digestate produced in the digestion process (SSR 17), plus
- The methane generated by the anaerobic disposal of the residual digestate produced in the digestion process (SSR 18), plus
- The methane created by manure treatment and storage systems that were affected by project activity (SSR 5)

Equation 5.11. Total Project Emissions from All Sources

$$PE = \left(PE_{CO_2} + PE_{CH_4,BCS} + PE_{CH_4,EF} + PE_{CH_4,N_2O,AT} + PE_{CH_4,LF} + PE_{CH_4,LS} \right)$$

Where,			Units
PE	=	The total project emissions, for the reporting period, from all SSRs within the GHG Assessment Boundary	$MTCO_2e$
PE_{CO2}	=	The total project carbon dioxide emissions, for the reporting period, from fossil fuel and grid electricity sources included in the GHG Assessment Boundary (SSRs 3, 8,13,15,17)	$MTCO_2e$
$PE_{CH4,BCS}$	=	The project methane emissions, for the reporting period, from the biogas control system (SSRs 9,10,11,12,14)	$MTCO_2e$
$PE_{CH4,EF}$	=	The project emissions, for the reporting period, from the digester effluent pond (SSR 16)	$MTCO_2e$
$PE_{CH4,N2O,AT}$	=	The project emissions of CH_4 and N_2O, for the reporting period, from the aerobic treatment of digestate material (SSR 17)	$MTCO_2e$
$PE_{CH4,LF}$	=	The project emissions, for the reporting period, from the anaerobic disposal of digestate material at a landfill (SSR 18)	$MTCO_2e$
$PE_{CH4,LS}$	=	The total sum of project emissions, for the reporting period, from manure management systems affected by the project (SSR 5)	$MTCO_2e$

5.2.1 Project CO_2 Emissions from On-Site Fossil Fuel Combustion and Grid Delivered Electricity (SSRs 3,8,13,15,17)

On-Site Stationary Combustion and Grid Electricity

Included in the GHG Assessment Boundary are carbon dioxide emissions resulting from fossil fuel combustion and/or the use of grid delivered electricity for on-site equipment that is used for:

- The sorting and pre-processing of waste (SSR 8)
- The upgrading of biogas to pipeline quality natural gas, compressed natural gas (CNG) or liquid natural gas (LNG) (SSR 13)
- The separation of liquid and solid components of the digestate (SSR 15)
- The aerobic treatment of digestate material (SSR 17)

If the project utilizes fossil fuel or grid electricity to power equipment necessary for performing the above processes, the resulting project carbon dioxide emissions shall be calculated per Equation 5.12 below.

Equation 5.12. Project Carbon Dioxide Emissions from Fossil Fuel and Grid Electricity

$$PE_{CO_2} = \left(PE_{CO_2,FF} + PE_{CO_2,EL} \right)$$

Where,			Units
$PE_{CO2,FF}$	=	The total carbon dioxide emissions from the destruction of fossil fuel during the reporting period	$MTCO_2$
$PE_{CO2,EL}$	=	The total indirect carbon dioxide emissions from the consumption of electricity from the grid during the reporting period	$MTCO_2$

$$PE_{CO_2,FF} = \frac{\sum_i \left(FF_{PR,i} \times EF_{FF,i} \right)}{1000}$$

Where,			Units
$FF_{PR,i}$	=	Total fossil fuel consumed by on-site combustion during the reporting period, by fuel type i	Volume Fossil Fuel
$EF_{FF,i}$	=	Fuel-specific emission factor, reference from Appendix B	$kgCO_2$ / Volume Fossil Fuel
1000	=	Kilograms per tonne	$kgCO_2/tCO_2$

$$PE_{CO_2,EL} = \left(EL_{PR} \times EF_{EL} \right)$$

Where,			Units
EL_{PR}	=	Total electricity consumed by project operations over the reporting period	MWh
EF_{EL}	=	Carbon emission factor for electricity used, referenced from the most recent U.S. EPA eGRID emission factor publication. Projects shall use the annual total output emission rates for the subregion where the project is located	$MTCO_2/MWh$

5.2.2 Project Emissions from the Biogas Control System (SSRs 9,10,11,12,14)

The biogas control system (consisting of the digester, the gas collection system, and the destruction devices) may be a significant source of methane emissions due to leakage of biogas from the digester and collection system (SSR 9) and incomplete destruction of methane in the various destruction devices (SSRs 10, 11, 12, 14). Methane emissions from the biogas control system must be calculated using Equation 5.13 below, using continuous biogas flow measurements and monthly methane concentration measurements. All flow measurement devices should internally correct to standard temperature and pressure (60^oF and 1 atm). If the biogas flow metering equipment does not internally correct for temperature and pressure, both temperature and pressure must be measured continuously and the guidance provided in Equation 5.14 shall be used to adjust the flow for temperature and pressure.

Equation 5.13. Project Methane Emissions from the BCS (SSRs 9, 10, 11, 12, 14)

$$PE_{CH_4,BCS} = 21 \times \sum_i \left(CH_{4,meter,i} \times \left(\frac{1}{BCE} - BDE_{i,weighted} \right) + CH_{4,vent,i} \right)$$

Where,			Units
$PE_{CH4,\ BCS}$	=	The methane emissions from the biogas control system during the reporting period	$MTCO_2e$
21	=	The global warming potential for methane	$MTCO_2e/MTCH_4$
$CH_{4,meter,i}$	=	The total quantity of methane collected and metered in month 'i'	$MTCH_4$/month
BCE	=	The methane collection efficiency of the biogas control system, as referenced from Appendix B	Fraction
$BDE_{i,weighted}$	=	The monthly weighted methane destruction efficiency of the combustion device(s)	Fraction
$CH_{4,vent,i}$	=	The monthly quantity of methane that is vented to the atmosphere due to BCS venting events, as quantified in Equation 5.15 below	$MTCH_4$

$$CH_{4,meter,i} = F_i \times CH_{4,conc,i} \times 0.04230 \times 0.000454$$

Where,			Units
F_i	=	The total monthly measured volumetric flow of biogas to all destruction devices – see Equation 5.14 for additional guidance on adjusting the biogas flow for temperature and pressure	scf/month
$CH_{4,conc,i}$	=	The monthly measured methane concentration of the biogas. If methane concentration is continuously measured, the value is equal to the monthly average	Fraction
0.04230	=	The density of methane gas at STP (1 atm, 60°F)	$lbsCH_4$/scf
0.000454	=	Conversion factor, lbs to metric tonnes	MT/lb

$$BDE_{i,weighted} = \frac{\sum_{DD} \left(BDE_{DD} \times F_{i,DD} \right)}{F_i}$$

Where,			Units
$BDE_{i,weighted}$	=	The monthly weighted average of all destruction devices used in month 'i'	Fraction
BDE_{DD}	=	The default methane destruction efficiency of a particular destruction device 'DD'. Referenced from in Appendix B	Fraction
$F_{i,DD}$	=	The monthly flow of biogas to a particular destruction device 'DD' – see Equation 5.11 for additional guidance on adjusting the biogas flow for temperature and pressure	scf/month
F_i	=	The total monthly measured volumetric flow of biogas to all destruction devices – see Equation 5.11 for additional guidance on adjusting the biogas flow for temperature and pressure	scf/month

Equation 5.14. Adjusting the Biogas Flow for Temperature and Pressure

If the biogas flow metering equipment does not internally correct for the temperature and pressure of the biogas, separate pressure and temperature measurements must be used to correct the flow measurement. The temperature and pressure of the biogas must be measured continuously.

Important: Apply the following equation only if the biogas flow metering equipment does not internally correct for temperature and pressure.

$$F_{scf} = F_{unadjusted} \times \frac{520}{T} \times \frac{P}{1}$$

Where,			Units
F_{SCF}	=	Adjusted volume of biogas collected for the given time interval, adjusted to 60° F and 1 atm	scf
$F_{unadjusted}$	=	Unadjusted volume of biogas collected for the given time interval	acf
T	=	Measured temperature of the biogas for the given time period (°R = °F + 459.67)	°R
P	=	Measured pressure of the biogas in for the given time interval	atm

5.2.2.1 Biogas Venting Events

Although not common under normal digester operation, it is possible that a venting event may occur due to failure of digester cover materials, the digester vessel, or the gas collection system. In the event that a system failure results in the venting of biogas, the quantity of methane released to the atmosphere shall be estimated according to Equation 5.15 below.

Equation 5.15. Methane Release from Venting Events

$$CH_{4,vent,i} = \left(MS_{BCS} + (F_{pw} \times t)\right) \times CH_{4,conc,i} \times 0.04230 \times 0.000454$$

Where,			Units
$CH_{4,vent,i}$	=	The monthly quantity of methane that is vented to the atmosphere due to BCS venting events	$MTCH_4$
MS_{BCS}	=	Maximum biogas storage of the BCS system	scf
F_{pw}	=	The average total flow of biogas from the digester for the entire week prior to the venting event	scf/day
t	=	The number of days of the month that biogas is venting uncontrolled from the project's BCS	Days

5.2.3 Project Methane Emissions from Liquid Digester Effluent Storage and Treatment (SSR 16)

Methane emissions from liquid digester effluent storage must be calculated using Equation 5.16 below. All projects sending the liquid portion of digester effluent to a storage pond shall use the following calculation approach to quantify project emissions from the effluent storage pond. If an OWD project recycles digester effluent, disposes of the effluent directly to a sewage system, or otherwise manages the effluent without the use of a liquid effluent storage pond, then this emission source is not applicable to the project.

Because of the variable nature of the waste entering the digester, it is necessary to base calculations on quarterly COD measurements taken from the effluent exiting the digester prior to entering the effluent storage pond. See Section 6.1.3.1 for additional guidance on performing COD sampling.

Equation 5.16. Project Methane Emissions from the BCS Effluent Pond (SSR 16)

$$PE_{CH_4,EF} = B_{o,EF} \times MCF_{EF} \times 21 \times UF_P \sum_i (Q_{EF,i} \times COD_{EF,i})$$

Where,			Units
$PE_{CH4,EF}$	=	The total project methane emissions from the biogas control system effluent pond over the reporting period	$MTCO_2e$
$B_{o,EF}$	=	The methane producing capacity of the effluent stream 'S'. Project developers may use site-specific values that are determined based on the sampling approach provided in Section 6.1.3.2. Alternatively, a value of 0.21 may be used for all effluent[34]	$MTCH_4$ / MTCOD
MCF_{EF}	=	The Methane Conversion Factor of the effluent storage pond. The value shall be equal to 0.3 [35]	Fraction
21	=	The global warming potential for methane	$MTCO_2e/MTCH_4$
UF_P	=	The project uncertainty factor to account for model uncertainties. Equal to 1.12 [36]	
$Q_{EF,i}$	=	The volume of effluent discharged into the effluent storage pond in month 'i'	m^3
$COD_{EF,i}$	=	The chemical oxygen demand of the effluent discharged into the storage pond in month 'i'. COD must be sampled quarterly according to the guidance provided in Section 6.1.3.1	$MTCOD/m^3$

5.2.4 Project Emissions from Aerobic Treatment of Digestate (SSR 17)

The digestion of organic waste may produce residual waste (digestate) that, depending on how it is treated, could result with material emissions of methane and/or nitrous oxide. The degree to which aerobic treatment of organics releases methane and/or nitrous oxide to the atmosphere is highly uncertain due the complicated GHG emission pathways for methane and nitrous oxide given various aerobic treatment methods. On a project-by-project basis, it is difficult to quantify the emissions of methane and nitrous oxide that occur from the composting of digestate material, however it is possible to place bounds on the emissions based on peer reviewed literature and internationally accepted GHG accounting methodologies.[37] For the purposes of this protocol, a conservative approach is taken based on a range of possible emission factors and a range of potential composting techniques that either maximize or minimize the potential for GHG emissions.

Table 5.2 outlines the tiered approach that must be followed to estimating the combined emissions of methane and nitrous oxide as a function of the amount of digestate going into the composting process (measured on a wet basis).[38]

[34] Per CDM ACM0014 V.2.1 and CDM AMS III.F V.6
[35] Equal to the higher bound MCF value for the anaerobic shallow lagoon system. 2006 IPCC Guidelines for National GHG Inventories, Vol. 5 Ch. 6 Table 6.3.
[36] Per CDM AMS III.H, V.16.
[37] Bounds for potential emissions of N_2O and CH_4 were developed based upon estimates and empirical results of GHG emission from composting, taken from the following sources: 2006 IPCC Guidelines for National GHG Inventories, CDM AM0025 V10, U.S. EPA Solid Waste Management and Greenhouse Gases: A Life-Cycle Assessment of Emissions and Sinks (2006), and Brown et al. *Greenhouse Gas Balance for Composting Operations* (2008).
[38] The GHG risk level is assessed based off of information obtained from: Brown et al. *Greenhouse Gas Balance for Composting Operations* (2008)

Table 5.2. Combined Methane and Nitrous Oxide Emission Factors for Aerobic Treatment of Digestate

Tier (GHG Emission Risk Level)	Emission Factor ($MTCO_2e$ / MT (Wet Weight) of Digestate Aerobically Treated*)
High: ▪ Digestate treated on-site in uncovered non-aerated static piles ▪ Material treated off-site at an undocumented facility	0.10
Medium: ▪ Digestate treated on-site in aerated systems (turned windrows or aerated static piles) ▪ Material treated off-site at a centralized composting facility	0.06
Low: ▪ Digestate treated on-site in an enclosed system (in-vessel) utilizing a bio-filter or biogas scrubber	0.02
Zero: ▪ Materials thermally dried upon separation from liquid effluent ▪ Materials used directly as animal bedding material ▪ Digestate immediately blended as soil amendment	0

* Project developers may use the site specific weight of waste going to aerobic treatment, or may use a conservative default value equal to 20% of the wet weight of the waste entering the digester. [39]

OWD projects shall use Equation 5.17 to estimate the combined emissions of methane and nitrous oxide from aerobic digestate treatment, using the appropriate emission factor from Table 5.2 above.

Equation 5.17. Methane and Nitrous Oxide Emissions from Aerobic Treatment of Digestate (SSR 17)

$$PE_{CH_4,N_2O,AT} = W_{D,AT} \times EF_{D,AT}$$

Where,			Units
$W_{D,AT}$	=	The total wet weight of digestate treated aerobically on-site, or sent off-site for aerobic treatment, over the reporting period. Project proponents may use site specific weights, or may use a default value of 20% of the wet weight of waste entering the digester	MT
$EF_{D,AT}$	=	The emission factor for the appropriate aerobic treatment Tier, as provided in Table B.3	$MTCO_2e$ / MTdigestate

Project carbon dioxide emissions from the use of fossil fuel or grid powered equipment during the aerobic digestate treatment process are calculated in Section 5.2.1.

[39] Default weight based conservatively on expert feedback

5.2.5 Project Emissions from Anaerobic Disposal of Digestate Produced in the Digestion Process (SSR 18)

If residual waste (digestate) is disposed of at a landfill, then the methane emissions from the landfilling of this waste must be accounted for. In order to quantify the emissions from the landfilling of digestate, the project developer must track the weight of digestate that goes to a landfill during the reporting period ($W_{D,LF}$). If digestate is disposed of anaerobically, the total emissions from disposal ($PE_{CH4,AD}$) over the reporting period shall be calculated using Equation 5.15. Project developers should use the look-up table (Table B.1 in Appendix B) to calculate the emissions from anaerobic disposal of digestate.

Equation 5.18. Methane Emissions from Anaerobic Treatment of Digestate (SSR 18)

$$PE_{CH_4,LF} = W_{D,LF} \times EF_{LF}$$

Where,			Units
$W_{D,LF}$	=	The total wet weight of digestate sent to a landfill over the reporting period. Project proponents must monitor the weight of digestate being sent to landfill according to guidance in Section 6.1.3.2	MT
EF_{LF}	=	The emission factor for the appropriate climatic region, as provided in Table B.3	$MTCO_2e$ / MTdigestate

5.2.6 Project Emissions from Manure Treatment Systems (SSR 5)

For projects that are co-digesting manure alongside eligible organic waste streams, it is necessary to account for the project emissions from all manure management systems that have been affected by project activity. This is necessary per the GHG accounting method used in the Reserve Livestock Project Protocol.[40] If the baseline anaerobic system still receives a percentage of the manure stream on an ongoing basis, the emissions from this source could be significant. If a project developer can demonstrate that a particular manure management system has not been affected by project activity, then this system can be excluded from the project emissions calculation. The project emissions calculation must be performed in accordance with the Reserve Livestock Project Protocol's project emissions guidance for non-BCS related sources, and aggregated for each livestock operation according to Equation 5.19 below.

[40] The Reserve Livestock Project Protocol sums the entire methane emissions from the baseline anaerobic lagoon, assuming that all the manure sent to the baseline anaerobic lagoon pre-project is sent to the BCS in the project scenario, however if a project is sending less than 100% of the manure stream to the BCS, then the remaining portion that is still going to the anaerobic lagoon after project implementation must be accounted for as project emissions.

Equation 5.19. Project Emissions from Non-BCS Related Manure Treatment/Storage Systems

$$PE_{CH_4,LS} = \sum_{S} PE_{CH_4,LS,S}$$

Where,			Units
$PE_{CH4,LS}$	=	The total sum for the reporting period of the project methane emission calculation results for all manure management systems affected by project activity	$MTCO_2e$
$PE_{CH4,LS,S}$	=	The project methane emissions from manure management system 'S', for the reporting period as calculated per the method described in the non-biogas control system related sources section of the Livestock Project Protocol	$MTCO_2e$

5.3 Calculating the Total Quantity of Methane Destroyed by the Project

The Reserve recognizes that there can be material differences between the calculated emission reductions and the actual quantity of methane that is captured and destroyed by the biogas control system. In most cases, the amount of metered methane that is destroyed by the project in any given reporting period should greatly exceed the sum of the baseline emissions over the same time period, due primarily to the incomplete degradation of waste as modeled in the FOD equation over a 10 year timeframe. In some instances, however, digester performance issues related to start-up periods, venting events, and other biogas control system operational issues may result in sub-optimal gas generation or destruction. These operational issues have the potential to result in substantially less methane destruction than is calculated, leading to an overestimation of emission reductions. To address this issue and maintain consistency with international best practice, the Reserve requires that calculated baseline emissions be compared to the ex-post metered quantity of methane that is captured and destroyed by the biogas control system. The lesser of the two values will represent the total baseline emissions for the reporting period.

Projects shall use Equation 5.20 to determine the total quantity of methane that is captured and destroyed by the project's BCS.

Equation 5.20. Metered Methane Destruction

$$CH_{4,destroyed} = \sum_i (CH_{4,meter,i} \times BDE_i) \times 21$$

Where,			Units
$CH_{4,destroyed}$	=	The aggregated quantity of methane collected and destroyed during the reporting period	$MTCO_2e$
$CH_{4,meter,i}$	=	The monthly quantity of methane collected and metered. See Equation 5.10 for calculation guidance	$MTCH_4$/month
BDE_i	=	The monthly methane destruction efficiency of the combustion device. In the event that there is more than one destruction device in operation in any given month, the weighted average destruction efficiency from all combustion devices is to be used.	Fraction
21	=	The global warming potential for methane	$MTCO_2e/MTCH_4$

6 Project Monitoring

The Reserve requires a Monitoring Plan to be established for all monitoring and reporting activities associated with the project. The Monitoring Plan will serve as the basis for verifiers to confirm that the monitoring and reporting requirements in this section and Section 7 have been and will continue to be met, and that consistent, rigorous monitoring and record-keeping is ongoing at the project site. The Monitoring Plan must cover all aspects of monitoring and reporting contained in this protocol and must specify how data for all relevant parameters in Table 6.1 (below) will be collected and recorded.

At a minimum the Monitoring Plan shall stipulate the frequency of data acquisition; a record keeping plan (see Section 7.2 for minimum record keeping requirements); the frequency of instrument cleaning, inspection, field check and calibration activities; and the role of individuals performing each specific monitoring activity, as well as QA/QC provisions to ensure that data acquisition and meter calibration are carried out consistently and with precision. The Monitoring Plan shall also contain a detailed diagram of the BCS—beginning when waste arrives at the project site—including the placement of all meters and equipment that affect SSRs within the GHG Assessment Boundary (see Figure 4.1).

Finally, the Monitoring Plan must include procedures that the project developer will follow to ascertain and demonstrate that the project at all times passes the Legal Requirement Test (Section 3.5.2).

Project developers are responsible for monitoring the performance of the project and ensuring that the operation of all project-related equipment is consistent with the manufacturer's recommendations.

6.1 Organic Waste and Wastewater Monitoring Requirements

There are numerous parameters related to OWD project activities that must be monitored and tracked in order to accurately quantify the baseline and project emissions. Below are the requirements that shall be met for the monitoring of OWD projects.

6.1.1 Food and Food-Soiled Paper Waste Monitoring

In order to quantify the GHG reductions from an OWD project that is digesting food and food-soiled paper waste streams, the project must accurately measure the quantity of in-coming waste delivered to the digestion facility, by waste stream. All projects must monitor and record each shipment of waste delivered to the facility using on-site scales and/or commercial receipts. The facility must keep a daily log showing:

- Date and time of all deliveries of material to the facility
- The weight of each delivered in-coming waste stream
- The source of each delivered in-coming waste stream

In addition, the project must retain all weigh scale receipts generated either on- or off-site indicating the weight and source of all delivered material to the facility. This information is necessary to aggregate the weight of eligible food and food-soiled paper waste delivered to the site from each eligible waste stream according to the guidance provided in Section 5.1.1 and to verify eligibility of MSW food waste from grocery store sources.

A QA/QC procedure for the inspection and calibration of weigh scales must be included in the Monitoring Plan. All weigh scales that are not used for commercial activities must be inspected and calibrated in accordance with manufacturer's specifications. The project may document incoming waste weight using commercial receipts from on- or off-site scales.

6.1.1.1 Documenting Site-Specific Waste Characterization Events

For each site-specific waste characterization event performed, the following records and photo documentation must be retained in order to demonstrate compliance with the waste characterization requirements of Section 5.1.1.4.

The following data must be recorded and retained for each sampling event:

- Origination and description of the waste stream each sample is drawn from
- Empty weight for each container used in the waste sort
- Weight of each sample (subtracting container weight) for the pre-sort sample and post-sort waste components (food, paper, ineligible waste)
- Fractional weight of each component (food, paper, ineligible waste) as compared to the total weight of the original sample

Photo documentation must be recorded and retained for verification purposes. Photo documentation should clearly show:

- The weigh scale or scales used for the sampling event
- The containers used for the sampling event
- The waste stream from which the sample was taken
- The waste sample prior to sorting
- The separated categories post-sorting

6.1.2 Monitoring and Documenting Pre-Project Waste Disposal for Grocery Store Waste Streams

Source-separated waste streams originating from grocery stores or supermarkets are eligible if, and only if, the project developer can document that:

- For a continuous period of at least 36 months prior to the date that waste sourced from the grocery store was first digested at the project digester, food and food-soiled paper waste generated by the grocery store was sent to a landfill, or
- Food and/or food-soiled paper waste originating from the grocery store was deemed as eligible waste at an OWC or OWD project registered with the Reserve, or
- The grocery store from which the waste originated is a new facility

In order to document the eligibility of the grocery store waste stream, projects must monitor the following information for each grocery store waste stream:

- The initial date the waste stream is delivered to the project digester, for all new grocery store waste streams
- The origin of the new grocery store waste stream (by facility)
- The previous waste disposal methods used by the grocery store waste generator, for each new grocery store waste stream
- The opening date of any new grocery store facilities supplying waste to the project

Additionally, documentation demonstrating that grocery store waste was sent to landfill(s) prior to diversion to the project digester or that the grocery store is a new facility should be collected and retained by the project for verification purposes. Acceptable documentation includes, but is not limited to:

- Landfill tipping receipts from the grocery store and/or contracted waste haulers
- Waste hauler contracts
- Internal memos and/or employee training documents detailing waste handling and/or organics separation procedures, goals, and timelines
- Media or marketing campaigns detailing dates related to the grocery store waste diversion program
- Internal documentation, store leasing documents, or media or marketing campaigns announcing the opening date of the grocery store facility

6.1.3 Agro-Industrial Wastewater Monitoring

For OWD projects that pump eligible agro-industrial wastewater streams into the digester, the project developer shall monitor and record the following data for each wastewater stream:

- The daily volume of wastewater (m^3/day) entering the digester (aggregated monthly)
- The monthly COD of the wastewater (MTCOD/m^3) prior to mixing with other residues

The monthly COD of the wastewater must be determined by sampling. All COD sampling must be performed in accordance with the requirements in Section 6.1.3.1.

A QA/QC procedure for the inspection, cleaning, and calibration of wastewater monitoring equipment must be included in the Monitoring Plan. Wastewater monitoring instruments must be inspected, cleaned, and calibrated in accordance with manufacturer's specifications.

6.1.3.1 Requirements for Chemical Oxygen Demand Sampling

The Chemical Oxygen Demand (COD) must be sampled and analyzed in accordance with the COD sampling and analysis technique detailed in the Standard Methods for the Examination of Water and Wastewater, 5220 – Chemical Oxygen Demand.[41] COD sampling and analysis shall be done by professionals experienced with the procedures used to determine COD as described in the above mentioned Standard Method approach.

6.1.3.2 Requirements for Determining a Site-Specific Maximum Methane Potential (B_o)

For OWD projects that choose to determine a site-specific maximum methane potential value for one or more wastewater streams being digested in the project's BCS, the following criteria must be met in order to ensure accuracy and consistency of the site-specific B_o values:

1. Wastewater samples for each eligible wastewater stream must be sampled prior to mixing with other residues.
2. For each eligible wastewater stream, a total of at least ten samples must be taken across the span of at least 1 week.

[41] http://www.standardmethods.org/store/ProductView.cfm?ProductID=37

3. All samples must be analyzed at a laboratory that is familiar and experienced with the Biochemical Methane Potential (BMP) Assay procedure used to determine the maximum methane potential value of wastewaters.[42]
4. At least ten samples must be analyzed by the chosen laboratory, the highest and lowest outlier results shall be discarded, and the site-specific B_o value to be used for the sampled wastewater stream shall equal the 90% lower confidence limit of the remaining assay results.

A site-specific B_o value determined according to the requirements outlined above will be valid for a period of 1 year from the date of the initial sampling event.

6.1.4 Digester Effluent and Digestate Monitoring

6.1.4.1 Liquid Effluent

For OWD projects that send the liquid portion of the digester effluent to a temporary storage pond, the project developer is responsible for monitoring the effluent that is discharged from the digester in order to quantify the methane emissions from the effluent storage pond for the reporting period in accordance with Equation 5.16. This requires that the project developer directly monitor and record:

- The daily volume of digester effluent wastewater (m^3/day) that is exiting the digester prior to entering the effluent storage pond (aggregated monthly)
- The quarterly COD (MTCOD/m^3) of the effluent wastewater exiting the digester prior to entering the effluent storage pond

As an alternative to measuring the daily volume of digester effluent exiting the digester, the project developer may use the total daily measured influent volume of wastewater that enters the digester as a conservative approximation for daily digester effluent volume.

The quarterly COD of the effluent must be determined by sampling. All COD sampling must be performed in accordance with the requirements in Section 6.1.3.1. Samples must be taken prior to effluent entering the storage pond, and must be taken after solids are removed from the effluent stream.

A QA/QC procedure for the inspection, cleaning, and calibration of wastewater monitoring equipment must be included in the Monitoring Plan. Effluent monitoring instruments shall be inspected, cleaned, and calibrated in accordance with manufacturer's specifications.

6.1.4.2 Digestate Material

For OWD projects that dispose of all or a portion of the project's digestate material at a landfill, the project developer is responsible for monitoring the quantity of digestate that is disposed of. Emissions from the anaerobic disposal of digestate must be quantified in accordance with Section 5.2.5. This requires that the project developer directly monitor and record all vehicles delivering digestate to landfill systems and record:

- The weight (MT) on a wet basis of digestate material that is disposed of at a landfill (aggregated for the reporting period)

[42] For more information on BMP Assay analysis and procedures, see: Moody et al. "Use of Biochemical Methane Potential (BMP) Assays for Predicting and Enhancing Anaerobic Digester Performance." (2009) http://sa.pfos.hr/sa2009/radovi/pdf/Radovi/r10-009.pdf

6.2 Biogas Control System Monitoring

Project developers are responsible for monitoring the performance of the project and operating each component of the biogas collection and destruction system (BCS) in a manner consistent with the manufacturer's recommendations. The methane capture and control system must be monitored with measurement equipment that directly meters:

- The flow of biogas delivered to each destruction device[43], measured continuously and recorded every 15 minutes or totalized and recorded at least daily, adjusted for temperature and pressure
- The fraction of methane in the biogas, measured with a continuous analyzer or, alternatively, with quarterly measurements

Flow data must be corrected for temperature and pressure at 60°F and 1 atm, either internally or by using Equation 5.14.

Figure 6.1 represents the suggested arrangement of the biogas flow meters and methane concentration metering equipment.

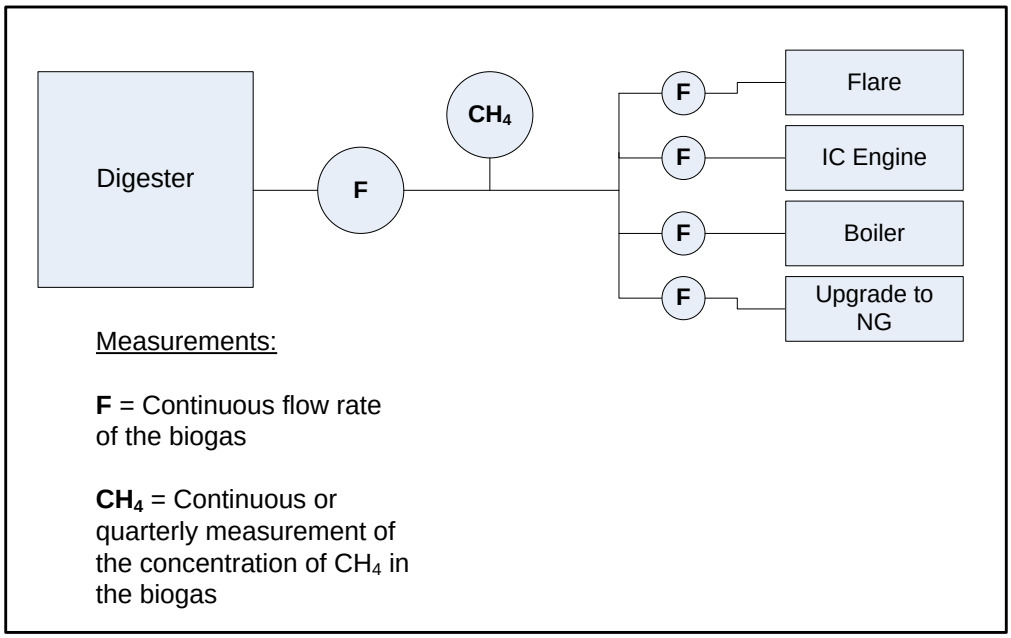

Figure 6.1. Suggested Arrangement of Biogas Metering Equipment

Note: The number of flow meters must be sufficient to track the total flow as well as the flow to each combustion device. The above example includes one more flow meter than would be necessary to achieve this objective

Operational activity of the destruction devices shall be monitored and documented at least hourly to ensure actual methane destruction. GHG reductions will not be accounted for or credited during periods in which the destruction device is not operational. For flares, operation is defined as thermocouple readings above 500°F. For all other destruction devices, the means of demonstration shall be determined by the project developer and subject to verifier review.

[43] A single meter may be used for multiple, identical destruction devices. In this instance, methane destruction in these units will be eligible only if both units are monitored to be operational

If for any reason the destruction device or the operational monitoring equipment (for example, the thermocouple on the flare) is inoperable, then all metered biogas going to the particular device shall be assumed to be released to atmosphere during the period of inoperability. During the period of inoperability, the destruction efficiency of the device must be assumed to be zero. In Equation 5.10, the monthly destruction efficiency (BDE) value shall be adjusted accordingly. See below for an example BDE adjustment.

Box 6.1. Example BDE Adjustment

As an example, consider a situation where the primary destruction device is an open flare with a BDE of 96%, and it is found to be inoperable for a period of 5 days of a 30 day month. Assume that the total flow of biogas to the flare for the month is 3,000,000 scf, and that the total flow recorded for the 5 day period of inoperability is 500,000 scf. In this case, the monthly BDE would be adjusted as follows:

BDE = {(0.96 x 2,500,000) + (0.0 x 500,000)} / 3,000,000 = 80%

6.2.1 Biogas Measurement Instrument QA/QC

All gas flow meters[44] and continuous methane analyzers must be:

- Field checked for calibration accuracy with the percent drift documented, using either a portable instrument (such as a pitot tube) or manufacturer specified guidance, at the end of but no more than two months prior to or after the end date of the reporting period[45]
- Calibrated by the manufacturer or a certified calibration service per manufacturer's guidance or every 5 years, whichever is more frequent

If the required calibration or calibration check is not performed and properly documented, no GHG credits may be generated for that reporting period. Flow meter calibrations shall be documented to show that the meter was calibrated to a range of flow rates consistent with the range of expected flow rates produced by the project BCS. Methane analyzer calibrations shall be documented to show that the calibration was carried out to the range of conditions (temperature and pressure) corresponding to the range of conditions that occur in the project BCS.

If the field check on a piece of equipment reveals accuracy outside of a +/- 5% threshold, calibration by the manufacturer or a certified service provider is required for that piece of equipment.

For the interval between the last successful field check and any calibration event confirming accuracy outside of the +/- 5% threshold, all data from that meter or analyzer must be scaled according to the following procedure. These adjustments must be made for the entire period from the last successful field check until such time as the meter is properly calibrated.

- For calibrations that indicate the flow meter was outside the +/- 5% accuracy threshold, the project developer shall estimate total emission reductions using i) the metered values without correction, and ii) the metered values adjusted based on the greatest

[44] Field checks and calibrations of flow meters shall assess the volumetric output of the flow meter.
[45] Instead of performing field checks, the project developer may instead have equipment calibrated by the manufacturer or a certified calibration service per manufacturer's guidance, at the end of but no more than two months prior to the end date of the reporting period to meet this requirement.

calibration drift recorded at the time of calibration. The lower of the two emission reduction estimates shall be reported as the scaled emission reduction estimate

For example, if a project conducts field checks quarterly during a year-long reporting period, then only three months of data will be subject at any one time to the penalties above. However, if the project developer feels confident that the meter does not require field checks or calibration on a greater than annual basis, then failed events will accordingly require the penalty to be applied to the entire year's data. Further, frequent calibration may minimize the total accrued drift (by zeroing out any error identified), and result in smaller overall deductions.

In order to provide flexibility in verification, data monitored up to two months after a field check may be verified for the reporting period. As such, the end date of the reporting period must be no more than two months after the latest successful field check.

If a portable calibration instrument is used (such as a pitot tube), the portable instrument shall be calibrated at least annually by the manufacturer or at an ISO 17025 accredited laboratory. The portable instrument also must be field calibrated to a known sample gas prior to each use.

6.2.2 Missing Data

In situations where the flow rate or methane concentration monitoring equipment is missing data, the project developer shall apply the data substitution methodology provided in Appendix D. If for any reason the destruction device monitoring equipment is inoperable (for example, the thermal coupler on the flare), then no emission reductions can be credited for the period of inoperability.

6.3 Monitoring Parameters

Prescribed monitoring parameters necessary to calculate baseline and project emissions are provided in Table 6.1. Refer to the monitoring section of the Livestock Project Protocol for the prescribed monitoring parameters necessary for livestock manure baseline and project calculations.

Table 6.1. Organic Waste Digestion Project Monitoring Parameters

Eq. #	Parameter	Description	Data unit	calculated (c) measured (m) reference(r) operating records (o)	Measurement frequency	Comment
General Project Parameters						
	Regulations	Project developer attestation of compliance with regulatory requirements relating to the digester project	Environmental regulations	N/A	Each verification cycle	Information used to: 1) To demonstrate ability to meet the Legal Requirement Test – where regulation would require the installation of a biogas control system. 2) To demonstrate compliance with associated environmental rules, e.g. criteria pollutant and effluent discharge limits.
Equation 5.1	ER	The total emission reductions for the reporting period	$MTCO_2e$	c	Each reporting period	
Equation 5.1	BE	The total baseline emissions for the reporting period, from all SSRs in the GHG Assessment Boundary	$MTCO_2e$	c	Each reporting period	BE is the lesser of the two values: BE_c or $CH_{4,destroyed}$.
Equation 5.1	PE	The total project emissions for the reporting period, from all SSRs in the GHG Assessment Boundary	$MTCO_2e$	c	Each reporting period	
Equation 5.2	BE_c	The total calculated baseline emissions from all SSR in the GHG Assessment Boundary during the reporting period	$MTCO_2e$	c	Each reporting period	
Equation 5.2	BE_{SW}	The total baseline emissions during the reporting period, for eligible solid waste (food and food-soiled paper) streams	$MTCO_2e$	c	Each reporting period	

Eq. #	Parameter	Description	Data unit	calculated (c) measured (m) reference(r) operating records (o)	Measurement frequency	Comment
Equation 5.2 Equation 5.8	BE_{WW}	The total baseline emissions during the reporting period, for eligible agro-industrial wastewater streams	$MTCO_2e$	c	Each reporting period	
Equation 5.2 Equation 5.10	BE_{LS}	The total sum of the calculated baseline emissions during the reporting period, for all livestock operations contributing manure to the digester	$MTCO_2e$	c	Each reporting period	
Baseline Calculation Parameters for Food and Food-Soiled Paper Waste Streams						
	Origin of waste streams	The jurisdiction where the food waste and/or soiled paper waste originates	Jurisdiction (municipality or county)	N/A	For each truckload of waste	This information is necessary to track eligible food waste streams and ineligible food waste streams that are digested in the project's BCS, as well as to determine appropriate decay rates (k values) to use in the calculation.
Equation 5.3	$BE_{CH4,S}$	The baseline methane emissions from digested waste stream 'S' during the reporting period	$MTCO_2e$	c	Each reporting period	
Equation 5.3	$BE_{FW,S}$	The baseline methane emissions from the food waste component of eligible waste stream 'S' that is digested during the reporting period	$MTCO_2e$	c	Each reporting period	

Eq. #	Parameter	Description	Data unit	calculated (c) measured (m) reference(r) operating records (o)	Measurement frequency	Comment
Equation 5.3	$BE_{SP,S}$	The baseline methane emissions from the food-soiled paper waste component of eligible waste stream 'S' that is digested during the reporting period	$MTCO_2e$	c	Each reporting period	
Equation 5.4 Equation 5.6	$W_{FW,S}$	The aggregated weight of eligible food waste (on a wet basis) from eligible waste stream 'S' that is digested by the project during the reporting period	MT of food waste (wet weight)	c	Each reporting period	
Equation 5.4	WTE_S	The fraction of the waste from eligible waste stream 'S' that would have been incinerated at a waste-to-energy (WTE) plant in lieu of being landfilled	Fraction	r	N/A	Referenced by state of origination.
Equation 5.4	$L_{o,FW,S}$	The methane potential of food waste, measured on a wet basis	m^3CH_4/MT of food waste (wet weight)	r	N/A	Project must use a value of 128 for all food waste streams.
Equation 5.4	$FE_{FW,S}$	The fraction of the methane generated that is emitted to the atmosphere over a ten year time horizon, as calculated using the First Order Decay function	Fraction	c	Each reporting period	The fraction emitted to the atmosphere is a function of the decay rates of food waste, the landfill gas collection assumptions (See Box 5.1), and the amount of methane generated that is oxidized in the cover soil.

Eq. #	Parameter	Description	Data unit	calculated (c) measured (m) reference(r) operating records (o)	Measurement frequency	Comment
Equation 5.4	$k_{FW,S}$	Decay rate of food waste, by waste type and climate region	yr^{-1}	r	N/A	Referenced from Table B.1 in Appendix B. Figure B.1 is used to determine the climate region. The appropriate k value shall be chosen based on the k value applicable to the county where the waste originated.
Equation 5.4	GC_S	The gas collection factor for the waste stream 'S'	Fraction	r	N/A	Equal to the fraction of waste disposed at landfills with gas collection systems in the state from which the waste stream 'S' originates. Referenced by state from Table A.3 in Appendix A.
Equation 5.4	LCE_x	The fraction of methane that would be captured and destroyed by the LFG collection systems in the year x, starting with the year that the waste is diverted to the project (x=1) and ending with the year x=10	Fraction	r	N/A	All projects shall use a value of '0.0' for the first two years of calculated waste decay (x=1 to 2), a value of '0.5' for the third year (x=3), a value of '0.75' for years 4-7 (x=4 to 7), and a value of '0.95' for the remaining years of decay until the end of the calculation period (x=8 to 10). See Box 5.1 for a discussion on the LCE assumptions.
Equation 5.4 Equation 5.5	OX	Factor for the oxidation of methane by cover soil bacteria	Fraction	r	N/A	A value of 0.1 shall be used.[46]
Equation 5.5 Equation 5.6	$W_{SP,S}$	The aggregated weight of eligible soiled paper waste (on a wet basis) from eligible waste stream 'S' that is digested by the project during the reporting period	MT of soiled paper (wet weight)	c	Each reporting period	See Section 5.1.1.1 for guidance on determining the weight of eligible soiled paper waste.

[46] As per the Reserve Landfill Project Protocol V3.0, CDM Annex 10 – Tool to determine methane emissions avoided from duping waste at a SWDS (V4.0), and U.S. EPA *Solid Waste Management and Greenhouse Gases: A Lifecycle Assessment of Emissions and Sinks*, Chapter 6, Pg. 87, ftnt27.

Eq. #	Parameter	Description	Data unit	calculated (c) measured (m) reference(r) operating records (o)	Measurement frequency	Comment
Equation 5.5	$L_{o,SP,S}$	The methane potential of soiled paper waste, measured on a wet basis	Fraction	r	N/A	Projects must use a value of 310 for all soiled paper waste streams.[47]
Equation 5.5	$FE_{SP,S}$	The fraction of the methane generated that is emitted to the atmosphere over a ten year time horizon, as calculated using the First Order Decay function	Fraction	c	Each reporting period	The fraction emitted to the atmosphere is a function of the decay rates of soiled paper waste, the landfill gas collection assumptions (See Box 5.1), and the amount of methane generated that is oxidized in the cover soil.
Equation 5.5	$k_{SP,S}$	Decay rate of soiled paper waste, by waste type and climate region	yr^{-1}	r	N/A	Referenced from Table B.1 in Appendix B. Figure B.1 is used to determine the climate region. The appropriate k value shall be chosen based on the k value applicable to the county where the waste originated.
Equation 5.6	$W_{T,S}$	The aggregated total weight of waste (on a wet basis) from waste stream 'S' that is delivered to the facility during the reporting period	MT	m	Every delivery of waste stream 's' to the facility	Measured using on-site or off-site weigh scales. All weigh receipts must be retained for verification and deliveries must be logged daily.
Equation 5.6	FD_S	The fraction of the waste stream 'S' that is digested at the facility during the reporting period	Fraction	o	N/A	In the instance that less than 100% or a delivered waste stream is digested at the facility (e.g. if a portion of the waste is composted across the street at a neighboring compost facility). Equal to 1 if all eligible waste delivered is digested.

[47] U.S. EPA *Solid Waste Management and Greenhouse Gases: A Lifecycle Assessment of Emissions and Sinks*, Chapter 6, Exhibit 6-3. The value represents the methane potential of 'office paper'.

Eq. #	Parameter	Description	Data unit	calculated (c) measured (m) reference(r) operating records (o)	Measurement frequency	Comment
Equation 5.6 Equation 5.7	$F_{FW,S}$	The food waste fraction of waste stream 'S'	Fraction	m, r	Quarterly (if measured) or once during the reporting period (if referenced)	The fraction must be determined based on the corresponding methods described in Sections 5.1.1.2 and 5.1.1.3 according to the type of waste delivered to the site and the availability of local or state waste characterization data.
Equation 5.6 Equation 5.7	$F_{SP,S}$	The soiled paper waste fraction of waste stream 'S'	Fraction	m, r	Quarterly (if measured) or once during the reporting period (if referenced)	The fraction must be determined based on the corresponding methods described in Sections 5.1.1.2 and 5.1.1.3 according to the type of waste delivered to the site and the availability of local or state waste characterization data.
Baseline Calculation Parameters for Agro-Industrial Wastewater Streams						
Equation 5.8 Equation 5.9	$BE_{CH4,WW,S}$	The baseline methane emissions from wastewater stream 'S', for the reporting period	$MTCO_2e$	c	Each reporting period	
Equation 5.9	$B_{o,WW,S}$	The methane producing capacity of the wastewater stream 'S'	$MTCH_4/MTCOD$	m, r	Once per reporting period	A site-specific value may be used; alternatively a value of 0.21 shall be used.[48] See guidance in Section 6.1.3.2.
Equation 5.9	$MCF_{AT,S}$	The Methane Conversion Factor of the anaerobic treatment lagoon, pond, or tank where the wastewater was previously treated	Fraction	r	N/A	An MCF must be applied to each wastewater stream that would have been treated anaerobically. Referenced as the lower bound value from Table B.4 by treatment type.
Equation 5.9	UF_{BL}	The baseline uncertainty factor to account for model uncertainties	Fraction	r	N/A	Equal to 0.89.[49]

[48] Per CDM ACM0014 V.2.1, available at http://cdm.unfccc.int/methodologies/PAmethodologies/approved.html.
[49] Per Clean Development Mechanism (CDM) Methodology III.H, V.16.

Eq. #	Parameter	Description	Data unit	calculated (c) measured (m) reference(r) operating records (o)	Measurement frequency	Comment
Equation 5.9	$Q_{ww,S,i}$	The volume of wastewater from stream 'S' in month 'i'	m^3	m	Continuously for each waste stream pumping wastewater to the digester facility, or by truckload if trucked into the digester facility (aggregated monthly)	The volume of wastewater entering the digester must be known for all wastewater streams. Must continuously measure wastewater that is pumped in, and measure each truckload and aggregate monthly for each wastewater stream. See Section 6.1 for guidance.
Equation 5.9	$COD_{WW,S,i}$	The Chemical Oxygen Demand of each untreated wastewater stream 'S' for month 'i'	$MTCOD/m^3$	m	Monthly for each wastewater stream	COD must be sampled according the guidance in Section 6.1.3.1 for each wastewater stream 'S'.
Equation 5.10	$BE_{CH4,LS,S}$	The baseline methane emissions from all affected manure management systems 'S', for the reporting period, calculated per the Reserve Livestock Project Protocol	$MTCO_2e$	c	Each reporting period	
Project Calculation Parameters						
Equation 5.11 Equation 5.12	PE_{CO2}	The total project carbon dioxide emissions, for the reporting period	$MTCO_2e$	c	Each reporting period	From fossil fuel and grid electricity sources included in the GHG Assessment Boundary (SSRs 3, 8, 13, 15, 17)
Equation 5.11 Equation 5.13	$PE_{CH4,BCS}$	The project methane emissions, for the reporting period, from the biogas control system	$MTCO_2e$	c	Each reporting period	SSRs 9, 10, 11, 12, 14.
Equation 5.11 Equation 5.16	$PE_{CH4,EF}$	The project emissions, for the reporting period, from the digester effluent pond	$MTCO_2e$	c	Each reporting period	SSR 16.

Eq. #	Parameter	Description	Data unit	calculated (c) measured (m) reference(r) operating records (o)	Measurement frequency	Comment
Equation 5.11 Equation 5.17	$PE_{CH4,N2O,AT}$	The project emissions of CH_4 and N_2O, for the reporting period, from the aerobic treatment of digestate material	$MTCO_2e$	c	Each reporting period	SSR 17.
Equation 5.11 Equation 5.18	$PE_{CH4,LF}$	The project methane emissions, for the reporting period, from the anaerobic disposal of digestate material at a landfill	$MTCO_2e$	c	Each reporting period	SSR 18.
Equation 5.11 Equation 5.19	$PE_{CH4,LS}$	The total sum of project emissions, for the reporting period, from manure management systems affected by the project	$MTCO_2e$	c	Each reporting period	SSR 5, quantified using the Reserve Livestock Project Protocol.
Equation 5.12	$PE_{CO2,FF}$	The total carbon dioxide emissions from the destruction of fossil fuel during the reporting period	$MTCO_2$	c	Each reporting period	
Equation 5.12	$PE_{CO2,EL}$	The total indirect carbon dioxide emissions from the consumption of electricity from the grid during the reporting period	$MTCO_2$	c	Each reporting period	
Equation 5.12	$FF_{PR,i}$	Total fossil fuel consumed by on-site combustion, by fuel type i	Volume	o	Each reporting period	Referenced from fuel use records or estimated based on miles traveled (for mobile combustion sources not owned or operated by the project developer).
Equation 5.12	$EF_{FF,i}$	Fuel-specific emission factor	$kgCO_2$ / volume	r	Each reporting period	Referenced from Table B.7 in Appendix B.

Eq. #	Parameter	Description	Data unit	calculated (c) measured (m) reference(r) operating records (o)	Measurement frequency	Comment
Equation 5.12	EL_{PR}	Total electricity consumed by the project landfill gas collection and destruction system	MWh	o	Each reporting period	From electricity use records.
Equation 5.12	EF_{EL}	Carbon emission factor for electricity used	$lbCO_2$ / MWh	r	Each reporting period	Referenced from Appendix B.
Equation 5.13	$CH_{4,meter,i}$	The total quantity of methane collected and metered in month 'i'	$MTCH_4$/month	m, c	Continuously, aggregated monthly	Calculated from metered flow and CH_4 concentration measurements.
Equation 5.13	BCE	The biogas collection efficiency of the biogas control system	Fraction	r	Once per reporting period	A default factor that accounts for digester gas collection inefficiency. Referenced from Table B.5 by digester type and cover type.
Equation 5.13	BDE	The monthly methane destruction efficiency of the combustion device(s)	Fraction	r, c	Monthly	In the event that there is more than one destruction device in operation in any given month, the weighted average destruction efficiency from all combustion devices is to be used
Equation 5.13	F_i	The total monthly measured volumetric flow of biogas to all destruction devices	scf	m	Continuously, aggregated monthly	See Equation 5.14 for additional guidance on adjusting the biogas flow for temperature and pressure.
Equation 5.13	$F_{i,DD}$	The monthly flow of biogas to a particular destruction device	scf	m	Continuously, aggregated monthly	The flow of biogas to each combustion device must be known.

Eq. #	Parameter	Description	Data unit	calculated (c) measured (m) reference(r) operating records (o)	Measurement frequency	Comment
Equation 5.13	$CH_{4,conc,i}$	The monthly measured methane concentration of the biogas	Fraction	m	Quarterly or Continuously	If methane concentration is continuously measured, the value is equal to the monthly average. If quarterly measurements are used, the value is equal to the most recent methane concentration measurement.
Equation 5.13	$BDE_{i,weighted}$	The monthly weighted average of all destruction devices used in month 'i'	Fraction	c	Monthly	The weighted average for all destruction devices used to destroy biogas for a given month.
Equation 5.13	BDE_{DD}	The default methane destruction efficiency of a particular destruction device	Fraction	r	Monthly	The default destruction efficiency for each type of destruction device. Referenced from Table B.6 in Appendix B.
Equation 5.14	F_{scf}	Volume of biogas collected for the given time interval, adjusted to 60° F and 1 atm	scf	c	Continuously	Calculated if gas flow meters do not internally correct for the temperature and pressure of the biogas.
Equation 5.14	$F_{unadjusted}$	Unadjusted volume of biogas collected for the given time interval	acf	m	Continuously	Measured if gas flow meters do not internally correct for the temperature and pressure of the biogas.
Equation 5.14	T	Measured temperature of the biogas for the given time period	°R (°R = °F + 459.67)	m	Continuously	Measured to adjust the flow of biogas. No separate monitoring of temperature is necessary when using flow meters that automatically adjust flow volumes for temperature and pressure, expressing biogas volumes in normalized cubic feet.
Equation 5.14	P	Measured pressure of the biogas for the given time period	atm	m	Continuously	Measured to adjust the flow of biogas. No separate monitoring of pressure is necessary when using flow meters that automatically measure adjust flow volumes for temperature and pressure, expressing biogas volumes in normalized cubic feet.

Eq. #	Parameter	Description	Data unit	calculated (c) measured (m) reference(r) operating records (o)	Measurement frequency	Comment
Equation 5.15	$CH_{4,vent,i}$	The monthly quantity of methane that is released to the atmosphere due to BCS venting events	$MTCH_4$	c	Monthly	
Equation 5.15	MS_{BCS}	The maximum biogas storage of the BCS system	scf	r	Once per reporting period	Obtained from digester system design plans. Necessary to quantify the release of methane to the atmosphere due to an uncontrolled venting event.
Equation 5.15	F_{pw}	The average flow of biogas from the digester for the entire week prior to the uncontrolled venting event	scf/day	m	Weekly	The average flow of biogas can be determined from the daily records from the previous week.
Equation 5.15	t	The number of days of the month that biogas is venting uncontrolled from the project's BCS	Days	m, o	Monthly	The approximate number of days that the BCS vented biogas to the atmosphere, down to the nearest 4 hours, as determined from metering evidence, personnel accounts, and energy production records.
Equation 5.16	$B_{o,EF}$	The methane producing capacity of the effluent	$MTCH_4$ / MTCOD	r	N/A	A value of 0.21 must be used for all effluent.
Equation 5.16	MCF_{EF}	The Methane Conversion Factor of the effluent storage pond	Fraction	r	N/A	The Methane Conversion Factor of the effluent storage lagoon or the treatment system where digester effluent is stored or treated. Equal to 0.3.
Equation 5.16	UF_P	The project uncertainty factor to account for model uncertainties	Fraction	r	N/A	Equal to 1.12.[50]

[50] Per CDM AMS III.H, V.16.

Eq. #	Parameter	Description	Data unit	calculated (c) measured (m) reference(r) operating records (o)	Measurement frequency	Comment
Equation 5.16	$Q_{EF,i}$	The volume of effluent discharged into the effluent storage pond in month 'i'	m^3	m	Continuously, aggregated monthly	The volume of effluent exiting the digester before entering the effluent storage pond or the wastewater treatment system. See Section 6.1.4 for guidance.
Equation 5.16	$COD_{EF,i}$	The chemical oxygen demand of the effluent discharged into the storage pond in month 'i'	$MTCOD/m^3$	m	Quarterly	COD of the digester effluent must be sampled quarterly; refer to the guidance provided in Section 6.1.3.1.
Equation 5.17	$W_{D,AT}$	The total wet weight of digestate treated aerobically on-site, or sent off-site for aerobic treatment during the reporting period	MT	m, r	Measured by truckload and aggregated per reporting period (if using site-specific value)	From weigh station records or default value.
Equation 5.17	$EF_{D,AT}$	The combined N_2O and CH_4 emission factor for the appropriate aerobic treatment tier	$MTCO_2e$ / MT of digestate	r	Each reporting period	Referenced from Table 5.2 for appropriate aerobic treatment category.
Equation 5.18	W_{DLF}	The total weight of the digestate material disposed of at a landfill	MT/year	m	Measured by truckload and aggregated for the reporting period	From weigh station records.
Equation 5.18	EF_{LF}	The emission factor for the anaerobic treatment of digestate at a landfill, per the appropriate climatic region	$MTCO_2e$/MT digestate	r	Each reporting period	Referenced from Table B.3.
Equation 5.19	$PE_{CH4,LS,S}$	The project methane emissions from manure management system 'S', for the reporting period	$MTCO_2e$	c	Each reporting period	As calculated per the method described in the non-biogas control system related sources section of the Reserve Livestock Project Protocol.

Eq. #	Parameter	Description	Data unit	calculated (c) measured (m) reference(r) operating records (o)	Measurement frequency	Comment
Equation 5.1 Equation 5.20	$CH_{4,destroyed}$	The aggregated quantity of methane collected and destroyed during the reporting period	$MTCH_4$	m, c	Monthly	Measured in order to compare to modeled reductions (see Section 5.3).

7 Reporting Parameters

This section provides requirements and guidance on reporting rules and procedures. A priority of the Reserve is to facilitate consistent and transparent information disclosure among project developers. Project developers must submit verified emission reduction reports to the Reserve every 12 months at a minimum.

7.1 Project Submittal Documentation

Project developers must provide the following documentation to the Reserve in order to register an OWD project:

- Project Submittal form
- Signed Attestation of Title form
- Signed Attestation of Voluntary Implementation form
- Signed Attestation of Regulatory Compliance form
- Detailed system diagram from Monitoring Plan
- Verification Report
- Verification Opinion

Project developers must provide the following documentation each reporting period in order for the Reserve to issue CRTs for quantified GHG reductions:

- Verification Report
- Verification Opinion
- Signed Attestation of Title form
- Signed Attestation of Voluntary Implementation form
- Signed Attestation of Regulatory Compliance form

At a minimum, the above project documentation will be available to the public via the Reserve's online registry. Further disclosure and other documentation may be made available on a voluntary basis through the Reserve. Project submittal forms can be found at http://www.climateactionreserve.org/how/projects/register/project-submittal-forms/.

7.2 Record Keeping

For purposes of independent verification and historical documentation, project developers are required to keep all information outlined in this protocol for a period of 10 years after the information is generated or 7 years after the last verification. This information will not be publicly available, but may be requested by the verifier or the Reserve.

System information the project developer should retain includes:

- All data inputs for the calculation of GHG reductions, including all required sampled data
- Copies of all solid waste, air, water, and land use permits relevant to project activities; Notices of Violations (NOVs) relevant to project activities; and any administrative or legal consent orders relevant to project activities dating back at least 3 years prior to the project start date, and for each subsequent year of project operation
- Project developer attestation of compliance with regulatory requirements relating to the OWD project

- Biogas flow meter information (model number, serial number, manufacturer's calibration procedures)
- Methane monitor information (model number, serial number, calibration procedures)
- Destruction device monitor information (model number, serial number, calibration procedures)
- Cleaning and inspection records for all biogas meters
- Field check results for all biogas meters
- Calibration results for all meters
- Destruction device monitoring data for each destruction device
- Biogas flow and methane concentration data
- Food and food-soiled paper waste weight data
- Food and food-soiled paper waste characterization data
- Wastewater and digester effluent flow meter information (model number, serial number, manufacturer's calibration procedures)
- Wastewater and digester effluent flow data
- Results of CO_2e reduction calculations
- Initial and subsequent verification records and results
- All maintenance records relevant to the biogas control system, monitoring equipment, and destruction devices

Calibrated portable gas analyzer information that the project developer should retain includes:

- Date, time, and location of methane measurement
- Methane content of biogas (% by volume) for each measurement
- Methane measurement instrument type and serial number
- Date, time, and results of instrument calibration
- Corrective measures taken if instrument does not meet performance specifications

7.3 Reporting Period and Verification Cycle

Project developers must report GHG reductions resulting from project activities during each reporting period. Although projects must be verified every 12 months at a minimum, the Reserve will accept verified emission reduction reports more frequently, should the project developer choose to have a reporting period and verification schedule of less than 12 months. A reporting period cannot exceed 12 months, and no more than 12 months of emission reductions can be verified at once, except during a project's first verification, which may include historical emission reductions from prior years.

8 Verification Guidance

This section provides verification bodies with guidance on verifying GHG emission reductions associated with the diversion of organic waste and/or wastewater away from anaerobic treatment and disposal systems and to a biogas control system (BCS). This verification guidance supplements the Reserve's Verification Program Manual and describes verification activities specifically related to OWD projects.

Verification bodies trained to verify organic waste digestion projects must be familiar with the following documents:

- Climate Action Reserve Program Manual
- Climate Action Reserve Verification Program Manual
- Climate Action Reserve Livestock Project Protocol
- Climate Action Reserve Organic Waste Digestion Project Protocol

The Reserve's Program Manual, Verification Program Manual, and project protocols are designed to be compatible with each other and are available on the Reserve's website at http://www.climateactionreserve.org.

Only ISO-accredited verification bodies trained by the Reserve for this project type are eligible to verify OWD project reports. However, verification bodies must also complete the Livestock Project Protocol verification training in order to perform verifications of OWD projects. Verification bodies approved under other project protocol types are not permitted to verify OWD projects. Information about verification body accreditation and Reserve project verification training can be found on the Reserve website at http://www.climateactionreserve.org/how/verification/.

8.1 Standard of Verification

The Reserve's standard of verification for OWD projects is the OWD Project Protocol (this document), the Livestock Project Protocol (for manure co-digestion projects), the Reserve Program Manual, and the Verification Program Manual. To verify an OWD project report, verification bodies apply the guidance in the Verification Program Manual and this section of the protocol to the standards described in Sections 2 through 7 of this protocol. Sections 2 through 7 provide eligibility rules, methods to calculate emission reductions, performance monitoring instructions and requirements, and procedures for reporting project information to the Reserve.

8.2 Monitoring Plan

The Monitoring Plan serves as the basis for verification bodies to confirm that the monitoring and reporting requirements in Section 6 and Section 7 have been met, and that consistent, rigorous monitoring and record-keeping is ongoing at the project site. Verification bodies shall confirm that the Monitoring Plan covers all aspects of monitoring and reporting contained in this protocol and specifies how data for all relevant parameters in Table 6.1 are collected and recorded.

8.3 Verifying Project Eligibility

Verification bodies must affirm an OWD project's eligibility according to the rules described in this protocol. The table below outlines the eligibility criteria for OWD projects. This table does

not present all criteria for determining eligibility comprehensively; verification bodies must also look to Section 3 and the verification items list in Table 8.2.

Table 8.1. Summary of Eligibility Criteria for an Organic Waste Digestion Project

Eligibility Rule	Eligibility Criteria	Frequency of Rule Application
Start Date	Projects must be submitted for listing within 6 months of the project start date	Once during first verification
Location	United States and U.S. tribal areas	Once during first verification
Anaerobic Baseline	Projects digesting agro-industrial wastewater streams and/or manure streams must demonstrate that the depth of the anaerobic wastewater and/or manure treatment ponds and lagoons prior to the project's implementation were sufficient to prevent algal oxygen production and create an oxygen-free bottom layer; which means at least 1 meter depth	Once during first verification
Performance Standard	One of the following eligible waste streams must be consistently, periodically or seasonally digested in the project's biogas control system: ▪ Municipal Solid Waste (MSW) Food Waste: Food waste commonly disposed into a MSW system, consisting of uneaten food, food scraps, spoiled food and food preparation wastes ▪ Food-Soiled Paper Waste: Non-recyclable paper items that are co-mingled with eligible food waste, consisting of paper napkins and tissues, paper plates, paper cups, fast food wrappers, used pizza boxes, wax-coated cardboard, and other similar paper or compostable packaging items typically disposed of in a MSW system ▪ MSW food and food-soiled paper waste from grocery stores that historically sent food waste to landfills prior to sending food waste to the project digester ▪ MSW food and food-soiled paper waste from new grocery store facilities ▪ Agro-Industrial Wastewater: Organic loaded wastewater from industrial or agricultural processing operations that, pre-project, was treated in an uncontrolled anaerobic lagoon, pond, or tank at a privately owned treatment facility	Every verification
Legal Requirement Test	Signed Attestation of Voluntary Implementation form and monitoring procedures for ascertaining and demonstrating that the project passes the Legal Requirement Test	Every verification
Regulatory Compliance Test	Signed Attestation of Regulatory Compliance form and disclosure of all non-compliance events to verifier; project must be in material compliance with all applicable laws	Every verification
Exclusions	▪ Grid electricity and fossil fuel displacement ▪ Wastewater produced at breweries, ethanol plants, pharmaceutical production facilities, and pulp and paper plants	Every verification

8.4 Core Verification Activities

The Organic Waste Digestion Project Protocol provides explicit requirements and guidance for quantifying the GHG reductions associated with the diversion of organic waste and/or wastewater away from anaerobic treatment and disposal systems and to a BCS. The Verification Program Manual describes the core verification activities that shall be performed by verification bodies for all project verifications. They are summarized below in the context of an OWD project, but verification bodies must also follow the general guidance in the Verification Program Manual.

Verification is a risk assessment and data sampling effort designed to ensure that the risk of reporting error is assessed and addressed through appropriate sampling, testing, and review. The three core verification activities are:

1. Identifying emissions sources, sinks, and reservoirs (SSRs)
2. Reviewing GHG management systems and estimation methodologies
3. Verifying emission reduction estimates

Identifying emission sources, sinks, and reservoirs

The verification body reviews for completeness the sources, sinks, and reservoirs identified for a project, such as, *inter alia*, food waste disposal at landfills, anaerobic wastewater treatment, and/or manure treatment at livestock operations (if co-digesting manure with waste streams).

Reviewing GHG management systems and estimation methodologies

The verification body reviews and assesses the appropriateness of the methodologies and management systems that the OWD project operator uses to gather data and calculate baseline and project emissions.

Verifying emission reduction estimates

The verification body further investigates areas that have the greatest potential for material misstatements and then confirms whether or not material misstatements have occurred. This involves site visits to the project to ensure the systems on the ground correspond to and are consistent with data provided to the verification body. In addition, the verification body recalculates a representative sample of the performance or emissions data for comparison with data reported by the project developer in order to double-check the calculations of GHG emission reductions.

8.5 OWD Verification Items

The following tables provide lists of items that a verification body needs to address while verifying an OWD project. The tables include references to the section in the protocol where requirements are further specified. The table also identifies items for which a verification body is expected to apply professional judgment during the verification process. Verification bodies are expected to use their professional judgment to confirm that protocol requirements have been met in instances where the protocol does not provide (sufficiently) prescriptive guidance. For more information on the Reserve's verification process and professional judgment, please see the Verification Program Manual.

Note: These tables shall not be viewed as a comprehensive list or plan for verification activities, but rather guidance on areas specific to OWD projects that must be addressed during verification.

8.5.1 Project Eligibility and CRT Issuance

Table 8.2 lists the criteria for reasonable assurance with respect to eligibility and CRT issuance for OWD projects. These requirements determine if a project is eligible to register with the Reserve and/or have CRTs issued for the reporting period. If any one requirement is not met, either the project may be determined ineligible or the GHG reductions from the reporting period (or sub-set of the reporting period) may be ineligible for issuance of CRTs, as specified in Sections 2, 3 and 6.

Table 8.2. Eligibility Verification Items

Protocol Section	Eligibility Qualification Item	Apply Professional Judgment?
2.1	Verify that the project meets the definition of an OWD project	No
2.2	Verify ownership of the reductions by reviewing the Attestation of Title	No
3.2	Verify eligibility of project start date	No
3.2	Verify accuracy of project start date based on operational records	Yes
3.3	Verify that project is within its 10 year crediting period	No
3.4	Verify that all pre-project wastewater and/or manure treatment lagoons/ponds/tanks were of sufficient depth to ensure an oxygen-free bottom layer (> 1m)	Yes
3.4	If the project is a Greenfield project at a new facility, verify that uncontrolled anaerobic treatment is common practice for the industry in the geographic region where the project is located	Yes
3.5.1	Verify that the project meets the Performance Standard Test	No
3.5.1	If co-digesting manure with eligible organic waste, verify that all livestock operations contributing manure to the digestion project meet eligibility requirements per the most recent Livestock Project Protocol (as of the time of project submittal)	No
3.5.1	Verify that that the project has documentation showing that all eligible waste streams originating from grocery stores or super markets were previously landfilled prior to the date that the waste is first delivered to the project digester	Yes
3.5.2	Confirm execution of the Attestation of Voluntary Implementation form to demonstrate eligibility under the Legal Requirement Test	No
3.5.2	Verify that the project Monitoring Plan contains a mechanism for ascertaining and demonstrating that the project passes the Legal Requirement Test at all times	No
3.5.2	Verify that the food waste stream is eligible per Section 3.5.2 if the project is digesting food waste originating from a jurisdiction that has a mandatory food waste diversion ordinance or regulation	Yes
3.6	Verify that the project activities comply with applicable laws by reviewing any instances of material non-compliance provided by the project developer and performing a risk-based assessment to confirm the statements made by the project developer in the Attestation of Regulatory Compliance form	Yes
6	Verify that monitoring meets the requirements of the protocol. If it does not, verify that variance has been approved for monitoring variations	No
6	Verify that all gas flow meters and continuous methane analyzers adhered to the inspection, cleaning, and calibration schedule specified in the protocol. If they do not, verify that variance has been approved for monitoring variations or that adjustments have been made to data per the protocol requirements	No
6	Verify that adjustments for failed calibrations were properly applied	No
6,Appendix D	If used, verify that data substitution methodology was properly applied	No

8.5.2 Quantification

Table 8.3 lists the items that verification bodies shall include in their risk assessment and re-calculation of the project's GHG emission reductions. These quantification items inform any determination as to whether there are material and/or immaterial misstatements in the project's GHG emission reduction calculations. If there are material misstatements, the calculations must be revised before CRTs are issued.

Table 8.3. Quantification Verification Items

Protocol Section	Quantification Item	Apply Professional Judgment?
4	Verify that all SSRs in the GHG Assessment Boundary are accounted for	No
5	Verify that the calculated baseline is compared with the total amount of methane metered and destroyed by the project, and the lesser of the two values is used as the baseline for the GHG reduction calculation	No
5.1	Verify that the baseline emissions from different eligible waste stream are properly aggregated	No
5.1.1	Verify that the correct k value is used for each food waste stream's baseline calculation	No
5.1.1	Verify that the FOD equation and/or the Look-up Table (Table B.3) is used correctly for each food waste stream	No
5.1.1	Verify that the weight of eligible food waste used for the baseline calculation is determined correctly	No
5.1.2	Verify that COD sampling of wastewater is performed monthly according to the guidance in Section 6.1.3.1	No
5.1.2	Verify that the correct MCF factor was used for the wastewater baseline calculation for each eligible wastewater stream	No
5.1.2	Verify that the B_o value used for the wastewater baseline calculation is the default, or a site-specific value determined according to the guidance of Section 6.1.2.2	No
5.1.3, 5.2.6	Verify that the baseline and project emissions calculations for all manure waste streams digested by the OWD project are calculated according to the requirements of the most recent (as of the time of project submittal) Livestock Project Protocol	No
5.2	Verify that the project emissions calculations were calculated according to the protocol with the appropriate data	No
5.2.1	Verify that the project developer correctly monitored, quantified and aggregated electricity use	Yes
5.2.1	Verify that the project developer correctly monitored, quantified and aggregated fossil fuel use	Yes
5.2.1	Verify that the project developer applied the correct emission factors for fossil fuel combustion and grid-delivered electricity	No
5.2.2	Verify that the project developer applied the correct methane destruction efficiencies	No
5.2.2	Verify that the project developer correctly quantified the amount of uncombusted methane	No
5.2.2	Verify that methane emissions resulting from any venting event are estimated correctly	Yes
5.2.3	Verify that COD sampling of liquid digester effluent is performed quarterly if the project stores liquid effluent in a storage pond	No

Protocol Section	Quantification Item	Apply Professional Judgment?
5.2.3	Verify that the correct MCF factor was used for the effluent storage pond	No
5.2.4	If the project aerobically treats (composts) digestate material either on-site or off-site, verify that the aerobic treatment Tier from Table 5.1 used for the calculation is consistent with the project-specific management of digestate material	Yes
5.2.5	Verify that the weight of digestate disposed anaerobically is determined correctly based off of appropriate data	No
5.3	Verify that the project developer correctly monitored and quantified the amount of methane destroyed by the project	No

8.5.3 Risk Assessment

Verification bodies will review the following items in Table 8.4 to guide and prioritize their assessment of data used in determining eligibility and quantifying GHG emission reductions.

Table 8.4. Risk Assessment Verification Items

Protocol Section	Items that Inform Risk Assessment	Apply Professional Judgment?
6	Verify that the project Monitoring Plan is sufficiently rigorous to support the requirements of the protocol and proper operation of the project	Yes
6	Verify that the BCS was operated and maintained according to manufacturer specifications	No
6	Verify that appropriate monitoring equipment is in place to meet the requirements of the protocol	No
6	Verify that the individual or team responsible for managing and reporting project activities are qualified to perform this function	Yes
6	Verify that appropriate training was provided to personnel assigned to greenhouse gas reporting duties	Yes
6	Verify that all contractors are qualified for managing and reporting greenhouse gas emissions if relied upon by the project developer. Verify that there is internal oversight to assure the quality of the contractor's work	Yes
6.1.2.1	Verify that the COD sampling and analysis was done by professionals experienced with the procedures used to determine COD as described in the Standard Method approach	Yes
6.1.2.2	Verify that all samples used to determine a site specific B_o factor are analyzed at a laboratory that is experienced with the Biochemical Methane Potential (BMP) Assay procedure used to determine the maximum methane potential value of wastewaters	Yes
7.2	Verify that all required records have been retained by the project developer	No

8.6 Completing Verification

The Verification Program Manual provides detailed information and instructions for verification bodies to finalize the verification process. It describes completing a Verification Report, preparing a Verification Opinion, submitting the necessary documents to the Reserve, and notifying the Reserve of the project's verified status.

9 Glossary of Terms

Accredited verifier	A verification firm approved by the Climate Action Reserve to provide verification services for project developers.
Additionality	Projects that are digesting one or more eligible feedstocks in a biogas control system (BCS) are deemed to exceed common practice, and that are not mandated by regulation.
Agro-industrial wastewater	Organic loaded wastewater from industrial or agricultural processing operations that, pre-project, was treated in an uncontrolled anaerobic lagoon, pond, or tank at a privately owned treatment facility. Excluded from eligibility based on the Reserve's performance standard analysis are wastewaters produced at breweries, ethanol plants, pharmaceutical production facilities, and pulp and paper plants.
Anaerobic	Pertaining to or caused by the absence of oxygen.
Anthropogenic emissions	GHG emissions resultant from human activity that are considered to be an unnatural component of the Carbon Cycle (i.e. fossil fuel destruction, de-forestation, etc.).
Biogas	Gas generated as a result of decomposition of organic materials under anaerobic conditions. Generally consists primarily of methane and carbon dioxide, with other trace gases.
Biogas control system (BCS)	A waste management system consisting of an anaerobic digester, biogas collection and metering equipment, and biogas destruction device(s).
Biogenic CO_2 emissions	CO_2 emissions resulting from the destruction and/or aerobic decomposition of organic matter. Biogenic emissions are considered to be a natural part of the Carbon Cycle, as opposed to anthropogenic emissions.
Carbon dioxide (CO_2)	The most common of the six primary greenhouse gases, consisting of a single carbon atom and two oxygen atoms.
CO_2 equivalent (CO_2e)	The quantity of a given GHG multiplied by its total global warming potential. This is the standard unit for comparing the degree of warming which can be caused by different GHGs.
Chemical Oxygen Demand (COD)	The chemical oxygen demand (COD) is the amount of oxygen consumed to completely chemically oxidize the organic water constituents to inorganic end products. COD is an important, rapidly measured variable for the approximate determination of the organic matter content of water samples.
Digester effluent	The largely decomposed residue material that has passed through the anaerobic digester system.
Digestate	The solid residue material separated from the liquid digester effluent stream.

Direct emissions	Greenhouse gas emissions from sources that are owned or controlled by the reporting entity.
Emission factor (EF)	A unique value for determining an amount of a greenhouse gas emitted for a given quantity of activity data (e.g. metric tons of carbon dioxide emitted per barrel of fossil fuel burned).
First Order Decay model (FOD model)	A calculation developed to model the decay of waste under anaerobic conditions, based off of first-order kinetic equations.
Flare	A destruction device that uses an open flame to burn combustible gases with combustion air provided by uncontrolled ambient air around the flame.
Fossil fuel	A fuel, such as coal, oil, and natural gas, produced by the decomposition of ancient (fossilized) plants and animals.
Greenfield project	A project implemented at new industrial facilities that have no prior wastewater treatment system.
Greenhouse gas (GHG)	Carbon dioxide (CO_2), methane (CH_4), nitrous oxide (N_2O), sulfur hexafluoride (SF_6), hydrofluorocarbons (HFCs), or perfluorocarbons (PFCs).
GHG reservoir	A physical unit or component of the biosphere, geosphere, or hydrosphere with the capability to store or accumulate a GHG that has been removed from the atmosphere by a GHG sink or a GHG captured from a GHG source.
GHG sink	A physical unit or process that removes GHG from the atmosphere.
GHG source	A physical unit or process that releases GHG into the atmosphere.
Global Warming Potential (GWP)	The ratio of radiative forcing (degree of warming to the atmosphere) that would result from the emission of one unit of a given GHG compared to one unit of CO_2.
Indirect emissions	Reductions in GHG emissions that occur at a location other than where the reduction activity is implemented, and/or at sources not owned or controlled by project participants.
Landfill	A defined area of land or excavation that receives or has previously received waste that may include household waste, commercial solid waste, non-hazardous sludge, and industrial solid waste.
Landfill gas (LFG)	Gas resulting from the decomposition of wastes placed in a landfill. Typically, landfill gas contains methane, carbon dioxide and other trace organic and inert gases.
Metric ton or “tonne” (MT)	A common international measurement for the quantity of GHG emissions, equivalent to about 2204.6 pounds or 1.1 short tons.

Methane (CH_4)	A potent GHG with a GWP of 21, consisting of a single carbon atom and four hydrogen atoms.
MMBtu	One million British thermal units.
Mobile combustion	Emissions from the transportation of materials, products, waste, and employees resulting from the combustion of fuels in company owned or controlled mobile combustion sources (e.g. cars, trucks, tractors, dozers, etc.).
Mixed MSW	Non-source separated waste consisting of organic and inorganic components, reflecting waste typically disposed of at a landfill.
MSW food waste	Non-industrial food waste commonly disposed into a MSW system, consisting of uneaten food, spoiled food and food preparation wastes from homes, restaurants, kitchens, grocery stores, campuses, cafeterias, and similar institutions.
National Emission Standards for Hazardous Air Pollutants (NESHAP)	Federal emission control standards codified in 40 CFR 63. Subpart AAAA of Part 63 prescribes emission limitations for MSW landfills.
New Source Performance Standards (NSPS)	Federal emission control standards codified in 40 CFR 60. Subpart WWW of Part 60 prescribes emission limitations for MSW landfills.
Project baseline	A “business as usual” GHG emission assessment against which GHG emission reductions from a specific GHG reduction activity are measured.
Project developer	An entity that undertakes a GHG project, as identified in the OWD Project Protocol, Section 2.
Resource Conservation and Recovery Act (RCRA)	Federal legislation under which solid and hazardous waste disposal facilities are regulated.
Stationary combustion source	A stationary source of emissions from the production of electricity, heat, or steam, resulting from combustion of fuels in boilers, furnaces, turbines, kilns, and other facility equipment.
Verification	The process used to ensure that a given participant’s greenhouse gas emissions or emission reductions have met the minimum quality standard and complied with the Reserve’s procedures and protocols for calculating and reporting GHG emissions and emission reductions.
Verification body	A Reserve-approved firm that is able to render a verification opinion and provide verification services for operators subject to reporting under this protocol.

Waste stream	For the purpose of this protocol, an eligible waste stream is defined as an eligible waste type per the eligibility requirements in Section 3.5.1 (Post consumer food waste or agro-industrial wastewater), originating from a specific source or collection route. Examples: ▪ Residential SSO food and paper waste from a specific county or municipal jurisdiction ▪ Commercial SSO food and paper waste from a specific collection route ▪ Wastewater from a specific industrial plant

10 References

Alberta Environment, Specified Gas Emitters Regulation. *Quantification Protocol for the Anaerobic Decomposition of Agricultural Materials,* Version 1 (2007).

Brown, S., Kruger, C., & Subler, S. (2008). Greenhouse Gas Balance for Composting Operations. *Journal of Environmental Quality*, *Volume 37*, Pg 1396-1410.

Chicago Climate Exchange, *Draft Guidelines for Methane Avoidance Projects* (2008).

Climate Action Reserve, *Landfill Project Protocol*.
http://www.climateactionreserve.org/how/protocols/adopted/landfill/current-landfill-project-protocol/

Climate Action Reserve, *Livestock Project Protocol*.
http://www.climateactionreserve.org/how/protocols/adopted/livestock/current-livestock-project-protocol/

GE AES Greenhouse Gas Services, LLC. *Methodology for Waste Water Treatment Methane Capture and Destruction Projects,* Version 1.0 (2007).

GE AES Greenhouse Gas Services, LLC. *Methodology for Waste Water Treatment Methane Capture and Destruction Projects,* Version 1.1 (2008).

Hansen, T.L., Sommer, S.G., Gabriel, S., & Christensen, T.H. (2006). Methane Production During Storage of Anaerobically Digested Municipal Organic Waste. *Journal of Environmental Quality*, *Volume 35*, Pg 830-836.

International Standards Organization (ISO). ISO14064-1 – Specification with guidance at the organization level for quantification and reporting of greenhouse gas emissions and removals (2006).

International Standards Organization (ISO). ISO14064-2 – Specification with guidance at the project level for quantification, monitoring and reporting of greenhouse gas emission reductions or removal enhancements (2006).

IPCC, 2006. Guidelines for National Greenhouse Gas Inventories. (Volume 4 - Agriculture, Forestry and Other Land Use).
Webpage: http://www.ipcc-nggip.iges.or.jp/public/2006gl/index.htm

IPCC 2006 Guidelines for National Greenhouse Gas Inventories. (Volume 5 – Waste).
Webpage: http://www.ipcc-nggip.iges.or.jp/public/2006gl/index.htm

Recycled Organics Unit (2003). *Life Cycle Inventory and Life Cycle Assessment for Windrow Composting Systems*. Report prepared for NSW Department of Environment and Conservation (Sustainability Programs Division), Published by Recycled Organics Unit, The University of New South Wales, Sydney.

Regional Greenhouse Gas Initiative, Draft Model Rule (January 2007).
Smith, A., K. Brown, S. Ogilvie, K. Rushton, and J. Bates. (2001). Waste management options and climate change: Final report to the European Commission, DG Environment. Available at http://ec.europa.eu/environment/waste/studies/climate_change.htm

Spajic, R.; Burns, R.; Moody, L, Kralik, D. (2009). Use of Biochemical Methane Potential (BMP) Assays for Predicting and Enhancing Anaerobic Digester Performance.
Available at: http://sa.pfos.hr/sa2009/radovi/pdf/Radovi/r10-009.pdf

United Nations Food and Agriculture Organization, Chemical Oxygen Demand Definitions Webpage:
http://www.fao.org/gtos/tems/variable_show.jsp?VARIABLE_ID=123

United Nations Framework Convention on Climate Change (UNFCCC), Approved Consolidated Baseline and Monitoring Methodology ACM0014, "Mitigation of greenhouse gas emissions from treatment of industrial wastewater," Clean Development Mechanism Version 02.1, Sectoral Scopes 13 (2008).

United Nations Framework Convention on Climate Change (UNFCCC), Approved Baseline and Monitoring Methodology AM0073, "GHG emission reductions through multi-site manure collection and treatment in a central plant," Clean Development Mechanism Version 01, Sectoral Scopes 13 and 15 (2008).

United Nations Framework Convention on Climate Change (UNFCCC), Approved Baseline and Monitoring Methodology AM0025, "Avoided emissions from organic waste through alternative waste treatment processes," Clean Development Mechanism Version 11, Sectoral Scopes 01 and 13 (2008).

United Nations Framework Convention on Climate Change (UNFCCC), Approved Small-Scale Methodology III.E, "Avoidance of methane production from decay of biomass through controlled combustion, gasification or mechanical/thermal treatment," Clean Development Mechanism Version 15.1, Sectoral Scopes 13 (2007).

United Nations Framework Convention on Climate Change (UNFCCC), Approved Small-Scale Methodology III.F, "Avoidance of methane emissions through controlled biological treatment of biomass," Clean Development Mechanism Version 06, Sectoral Scopes 13 (2008).

United Nations Framework Convention on Climate Change (UNFCCC), Annex 10 Methodological Tool, "Tool to determine methane emissions avoided from dumping waste at a solid waste disposal site," Clean Development Mechanism Version 04, (2008).

U.S. Environmental Protection Agency - Climate Leaders, *Greenhouse Gas Inventory Protocol Offset Project Methodology for Project Type: Managing Manure with Biogas Recovery Systems* (2008).

U.S. Environmental Protection Agency, *Inventory of U.S. Greenhouse Gas Emissions and Sinks: 1990-2006*, EPA-430-R-07-002 (April 2007).

U.S. Environmental Protection Agency, *Solid Waste Management and Greenhouse Gases; A Lifecycle Assessment of Emissions and Sinks, Third Edition (*2006).
Available at: http://epa.gov/climatechange/wycd/waste/SWMGHGreport.html

U.S. Environmental Protection Agency Region 9, Anaerobic Digestion of Food Waste - Funding Opportunity No. EPA-R9-WST-06-004 Final Report. (2008)
Available at: http://www.epa.gov/region09/waste/organics/ad/EBMUDFinalReport.pdf

Appendix A Associated Environmental Impacts

Organic waste and manure digestion projects have many documented environmental benefits, including air emission reductions, water quality protection, and electricity generation. These benefits are the result of practices and technologies that are well managed, well implemented, and well designed. However, in cases where practices or technologies are poorly or improperly designed, implemented, and/or managed, local air and water quality could be compromised.

With regard to air quality, there are a number of factors that must be considered and addressed to realize the environmental benefits of a biogas project and reduce or avoid potential negative impacts. Uncontrolled emissions from combustion of biogas may contain between 200 to 300 ppm NO_X. The anaerobic treatment process creates intermediates such as ammonia, hydrogen sulfide, orthophosphates, and various salts, all of which must be properly controlled or captured. In addition, atmospheric releases at locations off-site where bio-gas is shipped may negate or decrease the benefit of emissions controls on-site. Thus, while devices such as Selective Catalyst Reduction (SCR) units can reduce NO_X emissions and proper treatment system operation can control intermediates, improper design or operation may lead to violations of federal, state, and local air quality regulations as well as release of toxic air contaminants.

With regard to water quality, it is critical that project developers and managers ensure digester integrity and fully consider and address post-digestion management of the effluent in order to adequately manage nutrient loading and avoid contamination of local waterways and groundwater resources. Catastrophic digester failures; leakage from pipework and tanks; and lack of containment in waste storage areas are all examples of potential problems. Further, application of improperly treated digestate and/or improper application timing or rates of digestate to agricultural land may lead to increased nitrogen oxide emissions, soil contamination, and/or nutrient leaching, thus negating or reducing benefits of the project overall.

As specified in Section 3.6, Project developers must comply with all local, state, and national air and water quality regulations pertaining to project activity. Projects must be designed and implemented to mitigate potential releases of pollutants such as those described, and project managers must acquire the appropriate local permits prior to installation to prevent violation of the law.

The Reserve agrees that GHG emission reduction projects should not undermine air and water quality efforts and will work with stakeholders to establish initiatives to meet both climate-related and localized environmental objectives.

Appendix B Data Lookup Tables

Table B.1. Decay Rates (k) by Waste Type and Climate

Climatic Category (by Mean Annual Precipitation)	Food Waste Decay Rate $k_{FW,S}$ (yr^{-1})	Soiled Paper Decay Rate $k_{SP,S}$ (yr^{-1})*
Dry (0-25 inches)	0.072	0.031
Wet (25-50 inches)	0.144	0.063
Very Wet (50 + inches)	0.288	0.126

Source: Memorandum to Jennifer Brady, Office of Resource Conservation and Recovery, US EPA: WARM Component-Specific Decay Rate Methods. ICF International, 2009.

* Soiled paper decay rate assumed to be equal to the decay rate of mixed office paper, per communication with M. Barlaz.

Table B.2. Fraction of Waste Sent to Waste to Energy (WTE) Facilities and Gas-Collection Fraction, by State

State	WTE_S (Fraction)	GC_S
ALABAMA	0.03	0.57
ALASKA	0.03	0.13
ARIZONA	0.00	0.63
ARKANSAS	0.01	0.80
CALIFORNIA	0.02	0.96
COLORADO	0.00	0.76
CONNECTICUT	0.65	1.00
DELAWARE	0.00	1.00
FLORIDA	0.25	0.83
GEORGIA	0.01	0.94
HAWAII	0.28	0.18
IDAHO	0.00	0.64
ILLINOIS	0.00	0.86
INDIANA	0.05	0.74
IOWA	0.01	0.63
KANSAS	0.00	0.69
KENTUCKY	0.00	0.78
LOUISIANA	0.04	0.90
MAINE	0.19	0.94
MARYLAND	0.20	0.90
MASSACHUSETTS	0.37	0.95
MICHIGAN	0.07	0.97
MINNESOTA	0.21	0.90
MISSISSIPPI	0.00	0.42
MISSOURI	0.01	0.79
MONTANA	0.01	0.56
NEBRASKA	0.00	0.46
NEVADA	0.00	0.92
NEW HAMPSHIRE	0.16	0.96
NEW JERSEY	0.15	1.00

State	WTE_S (Fraction)	GC_S
NEW MEXICO	0.00	1.00
NEW YORK	0.20	0.95
NORTH CAROLINA	0.01	0.68
NORTH DAKOTA	0.00	0.68
OHIO	0.00	0.90
OKLAHOMA	0.08	0.71
OREGON	0.04	0.97
PENNSYLVANIA	0.19	0.99
RHODE ISLAND	0.00	1.00
SOUTH CAROLINA	0.05	0.89
SOUTH DAKOTA	0.00	0.45
TENNESSEE	0.00	0.81
TEXAS	0.00	0.99
UTAH	0.04	0.76
VERMONT	0.09	0.99
VIRGINIA	0.13	0.95
WASHINGTON	0.04	0.95
WEST VIRGINIA	0.00	0.26
WISCONSIN	0.03	0.90
WYOMING	0.00	0.00

Source: Biocycle State of Garbage Report (2006), Table 3. (http://www.jgpress.com/images/art/0604/table3.gif)

Table B.3. Emissions from the Decay of Digestate at a Landfill ($MTCO_2e$/MT Waste) – Calculated Using the FOD Model

Decay Rate (k Value)	Digestate Emission Factor*
Dry	0.067
Wet	0.150
Very Wet	0.218

*The digestate emission factor is calculated using an FOD model with IPCC default values for sludge waste.

Table B.4. Methane Correction Factor (MCF) for Wastewater Treatment Systems

Type of Wastewater Treatment System	MCF Lower Bound
Anaerobic reactor without methane capture	0.8
Anaerobic shallow lagoon (depth < 2 m)	0.1*
Anaerobic deep lagoon (depth > 2m)	0.8

Source: *IPCC Guidelines for National GHG Inventories*, Volume 5, Chapter 6 (2006)

* A lower bound value of 0.1 is used instead of 0.0, the lower bound in the IPCC guidelines.

Table B.5. Biogas Collection Efficiency (BCE) by Digester Type

Digester Type	Cover Type	Biogas Collection Efficiency (BCE) as a Decimal
Covered anaerobic lagoon	Bank-to-bank, impermeable	95%
Complete mix, plug flow, or fixed film digester	Enclosed vessel	98%

Source: U.S. EPA Climate Leaders, *Offset Project Methodology for Managing Manure and Biogas Recovery Systems*, 2008. Table IIf.

Table B.6. Biogas Destruction Efficiency Default Values by Destruction Device

Biogas Destruction Device	Biogas Destruction Efficiency (BDE)*
Open flare	0.96
Enclosed flare	0.995
Lean-burn internal combustion engine	0.936
Rich-burn internal combustion engine	0.995
Boiler	0.98
Microturbine or large gas turbine	0.995
Upgrade and use of gas as CNG/LNG fuel	0.95
Upgrade and injection into natural gas transmission and distribution pipeline	0.98**
Offsite use of gas under a direct-use agreement	*Per corresponding destruction device factor (not pipeline)*

Source: The default destruction efficiencies for enclosed flares and electricity generation devices are based on a preliminary set of actual source test data provided by the Bay Area Air Quality Management District. The default destruction efficiency values are the lesser of the twenty fifth percentile of the data provided or 0.995. These default destruction efficiencies may be updated as more source test data is made available to the Reserve.

* If available, the official source tested methane destruction efficiency shall be used in place of the default methane destruction efficiency. Otherwise, project developers have the option to use either the default methane destruction efficiencies provided, or the site specific methane destruction efficiencies as provided by a state or local agency accredited source test service provider, for each of the combustion devices used in the project case.

****** The Revised 1996 IPCC Guidelines for National Greenhouse Gas Inventories gives a standard value for the fraction of carbon oxidized for gas destroyed of 99.5% (Reference Manual, Table 1.6, page 1.29). It also gives a value for emissions from processing, transmission and distribution of gas which would be a very conservative estimate for losses in the pipeline and for leakage at the end user (Reference Manual, Table 1.58, page 1.121). These emissions are given as 118,000kgCH4/PJ on the basis of gas consumption, which is 0.6%. Leakage in the residential and commercial sectors is stated to be 0 to 87,000kgCH4/PJ, which equates to 0.4%, and in industrial plants and power station the losses are 0 to 175,000kg/CH4/PJ, which is 0.8%. These leakage estimates are compounded and multiplied. The methane destruction efficiency for landfill gas injected into the natural gas transmission and distribution system can now be calculated as the product of these three efficiency factors, giving a total efficiency of (99.5% * 99.4% * 99.6%) 98.5% for residential and commercial sector users, and (99.5% * 99.4% * 99.2%) 98.1% for industrial plants and power stations.[51]

[51] GE AES Greenhouse Gas Services, Landfill Gas Methodology, Version 1.0 (July 2007).

Table B.7. CO_2 Emission Factors for Fossil Fuel Use

Fuel Type	Heat Content	Carbon Content (Per Unit Energy)	Fraction Oxidized	CO_2 Emission Factor (Per Unit Energy)	CO_2 Emission Factor (Per Unit Mass or Volume)
Coal and Coke	**MMBtu / Short ton**	**kg C / MMBtu**		**kg CO_2 / MMBtu**	**kg CO_2 / Short ton**
Anthracite Coal	25.09	28.26	1.00	103.62	2,599.83
Bituminous Coal	24.93	25.49	1.00	93.46	2,330.04
Sub-bituminous Coal	17.25	26.48	1.00	97.09	1,674.86
Lignite	14.21	26.30	1.00	96.43	1,370.32
Unspecified (Residential/ Commercial)	22.05	26.00	1.00	95.33	2,102.29
Unspecified (Industrial Coking)	26.27	25.56	1.00	93.72	2,462.12
Unspecified (Other Industrial)	22.05	25.63	1.00	93.98	2,072.19
Unspecified (Electric Utility)	19.95	25.76	1.00	94.45	1,884.53
Coke	24.80	31.00	1.00	113.67	2,818.93
Natural Gas (By Heat Content)	**Btu / Standard cubic foot**	**kg C / MMBtu**		**kg CO_2 / MMBtu**	**kg CO_2 / Standard cub. ft.**
975 to 1,000 Btu / Std cubic foot	975 – 1,000	14.73	1.00	54.01	Varies
1,000 to 1,025 Btu / Std cubic foot	1,000 – 1,025	14.43	1.00	52.91	Varies
1,025 to 1,050 Btu / Std cubic foot	1,025 – 1,050	14.47	1.00	53.06	Varies
1,050 to 1,075 Btu / Std cubic foot	1,050 – 1,075	14.58	1.00	53.46	Varies
1,075 to 1,100 Btu / Std cubic foot	1,075 – 1,100	14.65	1.00	53.72	Varies
Greater than 1,100 Btu / Std cubic foot	> 1,100	14.92	1.00	54.71	Varies
Weighted U.S. Average	1,029	14.47	1.00	53.06	0.0546
Petroleum Products	**MMBtu / Barrel**	**kg C / MMBtu**		**kg CO_2 / MMBtu**	**kg CO_2 / gallon**
Asphalt & Road Oil	6.636	20.62	1.00	75.61	11.95
Aviation Gasoline	5.048	18.87	1.00	69.19	8.32
Distillate Fuel Oil (#1, 2 & 4)	5.825	19.95	1.00	73.15	10.15
Jet Fuel	5.670	19.33	1.00	70.88	9.57
Kerosene	5.670	19.72	1.00	72.31	9.76
LPG (average for fuel use)	3.849	17.23	1.00	63.16	5.79
Propane	3.824	17.20	1.00	63.07	5.74
Ethane	2.916	16.25	1.00	59.58	4.14
Isobutene	4.162	17.75	1.00	65.08	6.45
n-Butane	4.328	17.72	1.00	64.97	6.70
Lubricants	6.065	20.24	1.00	74.21	10.72
Motor Gasoline	5.218	19.33	1.00	70.88	8.81
Residual Fuel Oil (#5 & 6)	6.287	21.49	1.00	78.80	11.80
Crude Oil	5.800	20.33	1.00	74.54	10.29
Naphtha (<401 deg. F)	5.248	18.14	1.00	66.51	8.31
Natural Gasoline	4.620	18.24	1.00	66.88	7.36
Other Oil (>401 deg. F)	5.825	19.95	1.00	73.15	10.15
Pentanes Plus	4.620	18.24	1.00	66.88	7.36
Petrochemical Feedstocks	5.428	19.37	1.00	71.02	9.18
Petroleum Coke	6.024	27.85	1.00	102.12	14.65
Still Gas	6.000	17.51	1.00	64.20	9.17
Special Naphtha	5.248	19.86	1.00	72.82	9.10
Unfinished Oils	5.825	20.33	1.00	74.54	10.34
Waxes	5.537	19.81	1.00	72.64	9.58

Source: EPA Climate Leaders, Stationary Combustion Guidance (2007), Table B-2 except:
Default CO_2 emission factors (per unit energy) are calculated as: Carbon Content × Fraction Oxidized × 44/12.
Default CO_2 emission factors (per unit mass or volume) are calculated as: Heat Content x Carbon Content × Fraction Oxidized × 44/12× Conversion Factor (if applicable). Heat content factors are based on higher heating values (HHV).

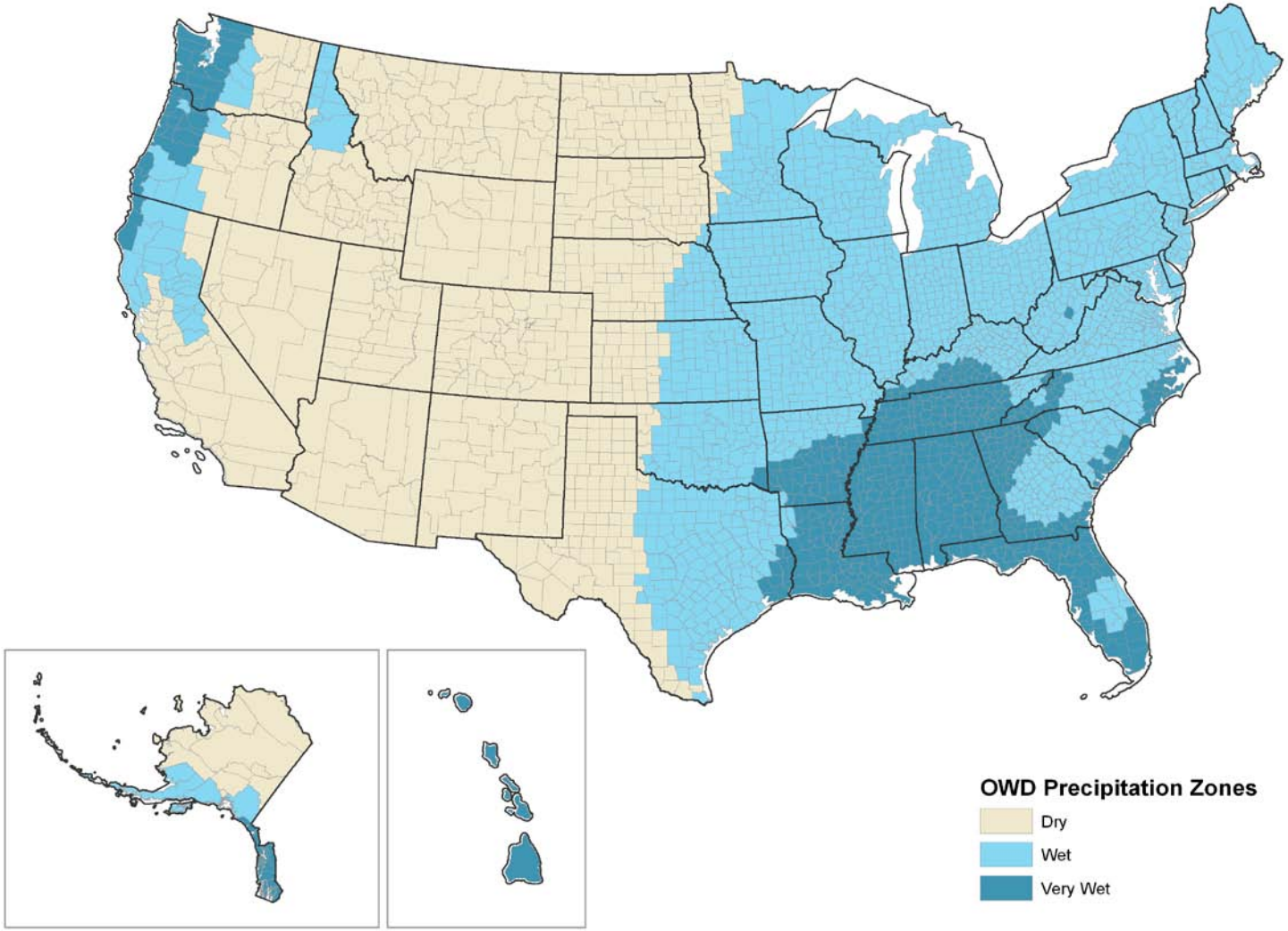

Source: USGS, Hydrologic landscape regions of the United States (2003)

Figure B.1. K-Value Categories in the U.S., by County

Appendix C Development of the Performance Standard

The analysis to establish a performance standard for the Organic Waste Digestion Project Protocol was undertaken by Science Applications International Corporation (SAIC). It took place in January to May of 2009. The analysis culminated in two papers that provided performance standard options and recommendations to support the Reserve's protocol development process, which the Reserve has incorporated into the protocol's eligibility rules (see Section 3).

The purpose of a performance standard is to establish a threshold that is significantly better than average greenhouse gas (GHG) production for a specified service, which, if met or exceeded by a project developer, satisfies the criterion of "additionality." The Reserve's project protocol focuses on the following emission reduction activity: the anaerobic digestion of organic wastes that were previously treated in uncontrolled anaerobic waste treatment systems.

The analysis to establish the performance standard evaluated organic waste management practices in the specified categories of waste streams. The paper did not provide a detailed quantitative analysis of organic waste practices or volumes in the U.S. but rather provides a qualitative review of current practices and regulations for the identified waste categories. It did not provide a performance "threshold" or baseline of GHG emissions from organic waste. Ultimately, it recommended for each waste category whether a performance standard to improve GHG emissions can be established. The paper had the following sections:

- Organic waste source industries in the U.S.
- The process for which organic wastes are generated from each identified waste stream; their respective "business as usual" and alternative (or better practice) management practices and potential GHG reductions for these management practices
- Current and anticipated federal and state regulations impacting organic waste management practices
- Recommendations for regulatory additionality
- Recommendations for OWD performance standard options
- Digestion economics

C.1. Selected Waste Generating Industries

As organic waste sources span across a range of different point sources and disposal locations, an industry-based approach was utilized to inform the performance standard. A list of 82 industries was identified using the North American Industry Classification System (NAICS), the standard used by Federal statistical agencies in classifying business establishments.[52] The list of 82 industries was then shortlisted based on their organic waste and greenhouse gas potential. Thirty-one industries were shortlisted for detailed analysis. These were organized under the three categories of organic waste:

- Food and food-processing solid waste sources
- Agricultural solid waste sources
- Industrial/agricultural wastewater sources (including wastewater coming from on-site agro-industrial and food processing industries)

Table C.1 shows the major organic waste generating industries considered in the paper.

[52] http://www.census.gov/eos/www/naics/

Table C.1. Selected Organic Waste Source Industries Studied

Category	Industry	Organic Waste Source Categories			Primary Manuf.	Secondary Manuf.
		Food & Food Processing Solid Waste	Agricultural Solid Waste	Industrial/ Agricultural Wastewater		
Grain Manufacturing	1. Rice Milling 2. Malt Manufacturing 3. Wet Corn Milling		X	X	X	
Oilseed Processing	4. Soybean Processing 5. Other Oilseed Processing		X	X	X	
Sugar Manufacturing	6. Sugarcane Mills 7. Cane Sugar Refining 8. Beet Sugar Manufacturing	X	X	X	X	X
Fruit and Vegetable Manufacturing	9. Frozen Fruit, Juice, and Vegetable Manufacturing 10. Fruit and Vegetable Canning	X		X	X	X
Pre-Cooked Foods	11. Frozen Specialty Food Manufacturing 12. Specialty Canning 13. Commercial Bakeries	X		X		X
Dairies	14. Fluid Milk Manufacturing 15. Creamery Butter Manufacturing 16. Cheese Manufacturing	X		X		X
Animal/ Seafood Processing	17. Animal (except Poultry) Slaughtering 18. Meat Processed from Carcasses 19. Rendering and Meat Byproduct Processing 20. Poultry Processing 21. Seafood Canning	X		X	X	X
Beverage Manufacturing	22. Soft Drink Manufacturing 23. Breweries 24. Wineries	X		X		X

Category	Industry	Organic Waste Source Categories			Primary Manuf.	Secondary Manuf.
		Food & Food Processing Solid Waste	Agricultural Solid Waste	Industrial/ Agricultural Wastewater		
Paper Milling	25. Paper (except Newsprint) Mills 26. Paperboard Mills 27. Cellulosic Organic Fiber Manufacturing	X*		X		X
Fertilizer Manufacturing	28. Nitrogenous Fertilizer Manufacturing 29. Phosphatic Fertilizer Manufacturing 30. Fertilizer (Mixing Only) Manufacturing + Compost Manufacturing	X*	X	X		X
Medicinal Manufacturing	31. Medicinal and Botanical Manufacturing	X*		X		X

* Non-food industries that generate organic wastes. (Note: for the purposes of this study, these industries were grouped with food processing for research, analysis, and discussion.)

Primary manufacturing is characterized by industries that process an agricultural or forestry product. These manufacturing plants or operations will generally be largest, and will produce the greatest quantities of waste per plant. Because of their large waste volumes and the producers' motivation to sell products to their highest use (and value), manufacturers will typically sell waste products to buyers who use them as feedstock for secondary products. Secondary manufacturing, on the other hand, is producing a more finished product from the primary manufacturing products.

In addition to these "pre-consumer" industries, SAIC also uncovered relevant information on "post-consumer" organic wastes from the Municipal Solid Waste (MSW) streams in the U.S. such as food scraps and yard trimmings. Data was also obtained and analyzed for fats, oils, and grease (FOG) wastes from pre- and post-consumer sources.

C.2. Organic Waste Generation and Management and OWD Performance Standard Options

SAIC looked at three categories of organic wastes: 1) solid food waste, 2) agricultural solid waste, and 3) agro-industrial wastewater and determined the types of waste and industries associated with each category, as well as waste quantities for each type of the waste and any seasonal and geographical variations. SAIC then looked at waste management practices in the U.S. for each of these categories and provided an overview of how waste emissions arise, the methane potential of the waste, how it is managed in a "business as usual" setting and alternative management technologies.

The gathered evidence showed that for the first two categories (industrial food wastes and agricultural waste), there is a strong economic incentive to extract and recover solids from waste streams and convert these into by-products or to burn wastes for energy.[53] Thus, the common practices of activity for these waste streams are already those with very low GHG emission potentials.

However, there are a few solid food wastes that cannot be reused as byproducts and inevitably end up in landfill. Some examples of landfilled solid food waste identified in the research include milk solids, condemned animal carcasses, meat scraps and pomace wastes from winery. Further studies should be conducted to determine if these niche pre-consumer waste streams can be better characterized and included into a food waste offset methodology. The Reserve will continue to research this topic for future revisions to the protocol.

Post-Consumer Food Waste

Studies by the U.S. EPA identified that 31.7 million tons of post-consumer food waste was generated in 2007, or 12.5% of total national MSW waste generated. In addition, studies by Biocycle Magazine estimate that just 0.8 million tons or 2.6% of this quantity was diverted from landfill to compost in 2007. Since only 2.6% of this waste is currently being diverted, this would typically qualify as achieving significantly improved GHG performance and meeting a stringent performance threshold.

FOG Wastes

FOG wastes (fats, oils, and grease) were also studied for their generation and disposal practices. It was discovered that yellow grease is a valuable product which is almost all recycled into by-products such as biofuels and rendered animal fats are also converted into valuable products such as soap and cosmetics. Brown grease (or grease trap grease) is mostly sent to POTWs with some individual practices being identified which involve solids being separated and sent to landfill. However, this is estimated to be a very small amount and in leading states, reuse of brown grease as biofuel feedstock is becoming common, as well as hauling to rendering plants for extraction of valuable components for reuse. Common practice therefore recognizes FOG waste as a recyclable resource and only small quantities are being sent to landfill, so it is concluded that these waste types would not typically qualify as achieving significantly improved GHG performance through application in digestion projects.

Yard Waste

Another organic waste category studied is yard waste. An estimated 32.6 million tons of yard trimmings were generated in 2007, or 12.8% of total national MSW generated. Unlike post-consumer food waste, an EPA estimate of 20.9 million tons or 64.1% of this quantity was diverted from landfill for composting or mulching in 2007. This is then the common practice and for the same reasons as were given for pre-consumer solid waste, there would appear to be no incentive to develop technologies to further reduce GHG emissions. Therefore, a performance standard showing significantly improved performance above common practice cannot be established for yard waste.

[53] The burning of agricultural solids generates biogenic carbon in the form of CO_2 and is therefore considered carbon neutral. However, open burning of these wastes is an incomplete combustion process and can generate soot, carbon monoxide, and other pollutants of concern. There could be some GHG benefits from reducing open burning by reducing carbon black formation and some N_20 formed during incomplete combustion, since these would be considered anthropogenic. Further study would be needed to establish if GHG emissions from carbon black and N_20 resulting from open burning are significant.

Composting

Composting of organic waste from the first two general categories is often considered a GHG reduction measure since aerobic degradation processes of the organic material tend to dominate over anaerobic processes. However, methane conversion potential (referred to as Methane Conversion Factors or MCFs, for which tables has been developed by the IPCC) of compost piles for manure are very low – ranging from zero to a maximum of 1.5% in a higher temperature setting. With such a low methane emission potential for the common practice case, there would appear to be no incentive to develop technologies to further reduce GHG emissions. Therefore, a performance standard showing significantly improved performance cannot be established for composted food and agricultural wastes.

Industrial and Agricultural Wastewater

The third category of waste studied was industrial/agricultural wastewater. SAIC found that residual wastewater was, in most cases, sent to a POTW after solids were reduced to a level acceptable to the POTW. The POTW, in turn, manages the residual wastewater in various ways. As noted earlier, the 2004 U.S. EPA identified that 59% of wastewater flow in the U.S. goes to facilities with anaerobic digestion and 20 % of flow in the U.S. goes to facilities that have anaerobic digestion and utilize the off-gas. Facilities without gas utilization are typically equipped with flares to combust the methane. According to U.S. EPA and California Integrated Waste Management Board studies, 60-70% of biosolids from POTW's are either composted or land applied. Both of these practices involve predominantly aerobic decomposition processes, although in some cases the biosolids could be temporarily stored in an anaerobic condition prior to composting or land treatment. Overall, the statistics indicate that a majority of POTW sludges are already treated in a way that generates little or no methane from aerobic processes or from biodigestion. The overall GHG emission baseline is then very low for the POTW sludges and there is little incentive to develop a performance standard to further reduce emissions.

However, based on follow-up research, SAIC identified that agro-industrial wastewater treatment does occur on-site at many food and agricultural processing operations. There are many agro-industrial industries and facilities in the U.S. with varying on-site wastewater management practices in the U.S. The variations are largely a consequence of the industry segment as some will inherently have higher organic material loading such as those identified by EPA in current U.S. inventories as significant methane emitters – i.e. pulp and paper manufacturing, meat and poultry processing, vegetables, fruits, and juices processing, starch-based ethanol production, and petroleum refining. Additionally, variations will occur geographically in the U.S. depending on the allowable organic discharge limits (post treatment) in any specific area, and the feasibility of discharging wastewaters to a public treatment system. Even with these limitations, several important trends have emerged that will inform a performance standard for digestion in several industry segments. Meat and poultry processing are the best candidates at this time for an OWD performance standard to create additional GHG reductions. On-site anaerobic wastewater management is a common practice in these industry segments and the market penetration data do not indicate any significant uptake of digesters and methane collection systems in these segments.

For the remaining industry segments reviewed, important questions remain. For fruit, vegetable, and juice processing, the market data indicate that some sub-categories (juice) have more AD system uptake than others (vegetable). In addition, EPA data indicate only 11% of these facilities have on-site wastewater systems. This appears to be attributable to a number of factors, including wide variations in the COD content of wastewater between different producer types within this diverse industry segment, and significant seasonal changes in wastewater

composition and volume at individual facilities. This leads to a mixed conclusion that facilities in this segment, if they can demonstrate a sufficient history of past anaerobic lagoon operation and low market penetration (e.g. vegetable processing), could be eligible for inclusion in the performance threshold. These outstanding questions indicate that it appears to be preferable to further break this industry segment down into sub-categories rather than to apply a uniform performance standard across it.

For breweries and the emerging corn/biofuel ethanol industry segments, the market data suggest that AD systems are becoming more common place, although specific market penetration percentages could not be determined. This raises questions about the additionality of AD system projects in corn ethanol plants and breweries until a better understanding of the market penetration of AD systems in these segments is developed.

Pulp and paper was not studied in the initial research as it is a complex industry that involves some chemical processes. However, the data obtained from EPA in this current research (high methane emissions, no indication of significant penetration of AD systems) would indicate potential for further investigation of the applicability of a performance standard for reducing methane emissions from anaerobic degradation processes. Specifically a separate evaluation of their on-site wastewater practices and AD system penetration appears warranted. A similar conclusion can be made for the pharmaceutical industry in that it can involve a variety of processes not studied in the original research but appear to have low penetration of digesters.

There are several other industrial segments for which the market data indicate the plausibility as well as low penetration of anaerobic digestion projects, including dairy foods processing, candy, sugar, and yeast production. For each of these industries, more information on existing wastewater practices and the relative prevalence of AD systems is needed before determining the applicability of a performance standard for reducing methane emissions from anaerobic degradation processes.

Based on the conclusions above, SAIC recommends categorizing the various industries examined according to their suitability for the development of an anaerobic digestion with methane recovery performance standard as follows:

Include as an Eligible Project Type

- Meat and poultry processing
- Vegetable processing

Exclude as an Eligible Project Type

- Breweries and ethanol industry segments

Promising: Needs Further Information to Ensure Consistency with Eligible Project Types

- Pulp and paper
- Dairy foods processing
- Sugar production
- Candy manufacturing
- Yeast production
- Fruit and juice processing
- Pharmaceuticals

C.3. Regulatory Conditions and Regulatory Additionality Recommendations

In order to properly credit emission reductions from digester projects, it is important to establish regulatory additionality that determines whether a project fulfills a regulatory obligation or if a project provides additional emission reductions beyond what is required by law. All GHG reduction projects are subject to a Legal Requirement Test to ensure that the emission reductions achieved by a project would not otherwise have occurred due to federal, state or local regulations.

In the study, SAIC found that there are no federal or state regulations currently in place that obligate waste source producers or wastewater management entities to invest in a biogas control system or a bio-digester. For landfills, Federal and State laws have long required methane collection systems. In California, starting in 2010, AB32 will also require any remaining uncontrolled MSW landfills to install emission control systems to manage methane emissions from the decomposition of organic matter.

Through AB939, California also calls for all municipalities to currently divert 50% of their waste stream from landfills, with an increase to a 75% diversion rate under consideration. Other states such as North Carolina and Missouri have similar landfill diversion laws. Thus, any municipality that has already achieved its landfill diversion goal would meet the Legal Requirement Test for additional landfill diversions of food wastes, for example. Conversely, a municipality that has not yet met its landfill diversion target may not fulfill the Legal Requirement Test for additional landfill diversions (at least until the target is achieved).

With a myriad of regulations that wholly or partly apply to activities involved with organic waste disposal (e.g. air quality, wastewater, compost management) and with a wide variety of industries that generate organic wastes, digestion project owners need to ensure their diversion of organics to digestion continues to meet relevant regulatory requirements for disposal. This will most likely need to be done on a case by case basis depending on the location, quantity of waste, and the operation that is generating the waste in order to properly account for any additional emission reductions that occur beyond what is required by law.

C.4. Digestion Economics

The SAIC study found that the dominant economic factor regarding adoption of digestion technology is capital and O&M costs for a digestion reactor, managing the solid, liquid and gaseous byproducts of digestion (e.g. send to landfill, land spreading, commodity byproduct, etc.).

Table C.2 outlines general guidelines to evaluate the capital and O&M costs of different types of feedstock for digestion.

Table C.2. Economic Evaluation Guidelines for Digestion Feedstock

Type of Feedstock	Capital Costs	Operation and Maintenance
Anaerobic digestion of liquids	$10-15 /gal of wastewater treated	$0.005 gallon treated (with energy recovery)
Anaerobic digestion of agricultural / animal waste	$60-75 /gal of wastewater treated	O&M Costs $0.006 /gal treated net capital payback Net O&M Income $0.04 per gallon treated
Anaerobic digestion of MSW	$50,000 per ton of daily volume	$15.00 per ton net capital payback
Aerobic digestion of liquids	$8.75 - 13 per gallon of daily volume treated	$0.0075 gallon treated

Economies of scale favor those facilities with higher throughput and an increased ability to effectively manage digestion conditions and byproducts. Waste generating industries, primary manufacturers or waste and wastewater management facilities that aggregate large quantities of materials will have the most favorable economics. However, large dairies, that could manage other wastes from nearby businesses, could also have the scale to achieve an economic payback. The payback time of investment in small- and medium scale digesters can be considerably high. Typical small-scale agricultural biogas plants (e.g. digester volume 235 m^3) can have payback times of over 10 years. Typical examples of large scale digestion plants (e.g. digester volumes 4,650 – 6,000m^3) have payback times between 3 – 10 years.[54]

Favorable economics may also exist at wastewater treatment plants that could install digesters or better yet have digesters that could be used or expanded to digest food waste. Due to increased biogas yields, the co-digestion of bio-wastes together with municipal sewage sludge in existing municipal sewage digesters can considerably reduce wastewater treatment costs. Therefore in many municipal sewage sludge digesters, organic wastes are co-digested on an occasional basis. Some successful examples from sewage treatment plants have been reported in Denmark and also in Germany. Typical co-substrate addition rates in sewage sludge digesters are between 5-20%. Adding co-substrates like flotation sludge, fat trap contents, food leftovers, etc., can considerably raise the biogas productivity of sewage sludge digesters by 40-230%. Nevertheless, if co-digestion is to be implemented into existing sewage treatment plants, depending on the bio-waste concentration and other factors, additional pre- and post-treatment equipment must be taken into consideration for the final cost calculation. For example, the cost and the logistical feasibility of cleaning (e.g. of plastic and other impurities) and grinding the materials so that they are suitable for the digester at the POTWs may be a major constraint in many cases.

Table C.3 provides a general example of a dedicated MSW fed digester plant.

[54] R.Braun, R. "Potential of Co-Digestion – Limits and Merits" April 2002. Available at: http://www.novaenergie.ch/iea-bioenergy-task37/Dokumente/final.PDF

Table C.3. Example Digester Plant, Payback Economics

Parameters	Values
Digester volume	150,000 tons/year
Main substrate	MSW – Post-Consumer Food Waste
Investment costs	$15,000,000
Annual capital repayment costs	$3,500,000
Other operating costs (year)	$2,500,000
Total annual costs	$6,000,000
Total revenue	$9,056,000
Net income (before taxes)	$3,056,000

Source: SAIC.

The simple payback for this investment of $15 million is 4.9 years. If one considers the value of GHG credits (of avoided methane emissions from MSW being landfilled) estimated at between $1 and $1.5 million annually,[55] the simple payback ranges from 3.2 years to 3.7 years. However, if the landfill is required to have methane controls, this reduces the methane emitted and therefore the value of GHG credits to $450,000 annually,[56] increasing the payback to 4.3 years.

[55] Based on EPA emissions factors for methane emissions from MSW in landfill (sourced from AP 42, Fifth Edition, Volume I Chapter 2: Solid Waste Disposal http://www.epa.gov/ttn/chief/ap42/ch02/index.html) and estimating carbon credit value at $8/ton (sourced from New Carbon Finance, Voluntary Market Research Note 13th January 2008 at www.newcarbonfinance.com/download.php?n=NCF_Voluntary_VCI_01_091.pdf&f=fileName&t=NCF_downloads).
[56] Based on 70% methane control efficiency rate.

Appendix D Data Substitution

This appendix provides guidance on calculating emission reductions when data integrity has been compromised due to missing data points. No data substitution is permissible for equipment such as thermocouples which monitor the proper functioning of destruction devices. Rather, the methodologies presented below are to be used only for the methane concentration and flow metering parameters.

The Reserve expects that projects will have continuous, uninterrupted data for the entire verification period. However, the Reserve recognizes that unexpected events or occurrences may result in brief data gaps.

The following data substitution methodology may be used only for flow and methane concentration data gaps that are discrete, limited, non-chronic, and due to unforeseen circumstances. Data substitution can only be applied to methane concentration *or* flow readings, but not both simultaneously. If data is missing for both parameters, no reductions can be credited.

Further, substitution may only occur when two other monitored parameters corroborate proper functioning of the destruction device and system operation within normal ranges. These two parameters must be demonstrated as follows:

1. Proper functioning can be evidenced by thermocouple readings for flares, energy output for engines, etc.
2. For methane concentration substitution, flow rates during the data gap must be consistent with normal operation.
3. For flow substitution, methane concentration rates during the data gap must be consistent with normal operations.

If corroborating parameters fail to demonstrate any of these requirements, no substitution may be employed. If the requirements above can be met, the following substitution methodology may be applied:

Duration of Missing Data	Substitution Methodology
Less than six hours	Use the average of the four hours immediately before and following the outage
Six to 24 hours	Use the 90% lower or upper confidence limit of the 24 hours prior to and after the outage, whichever results in greater conservativeness
One to seven days	Use the 95% lower or upper confidence limit of the 72 hours prior to and after the outage, whichever results in greater conservativeness
Greater than one week	No data may be substituted and no credits may be generated

Note: It is conservative to use the upper confidence limit when calculating emissions from the BCS (Equation 5.13); however, it is conservative to use the lower confidence limit when calculating the total amount of methane that is destroyed in the BCS (Equation 5.20).